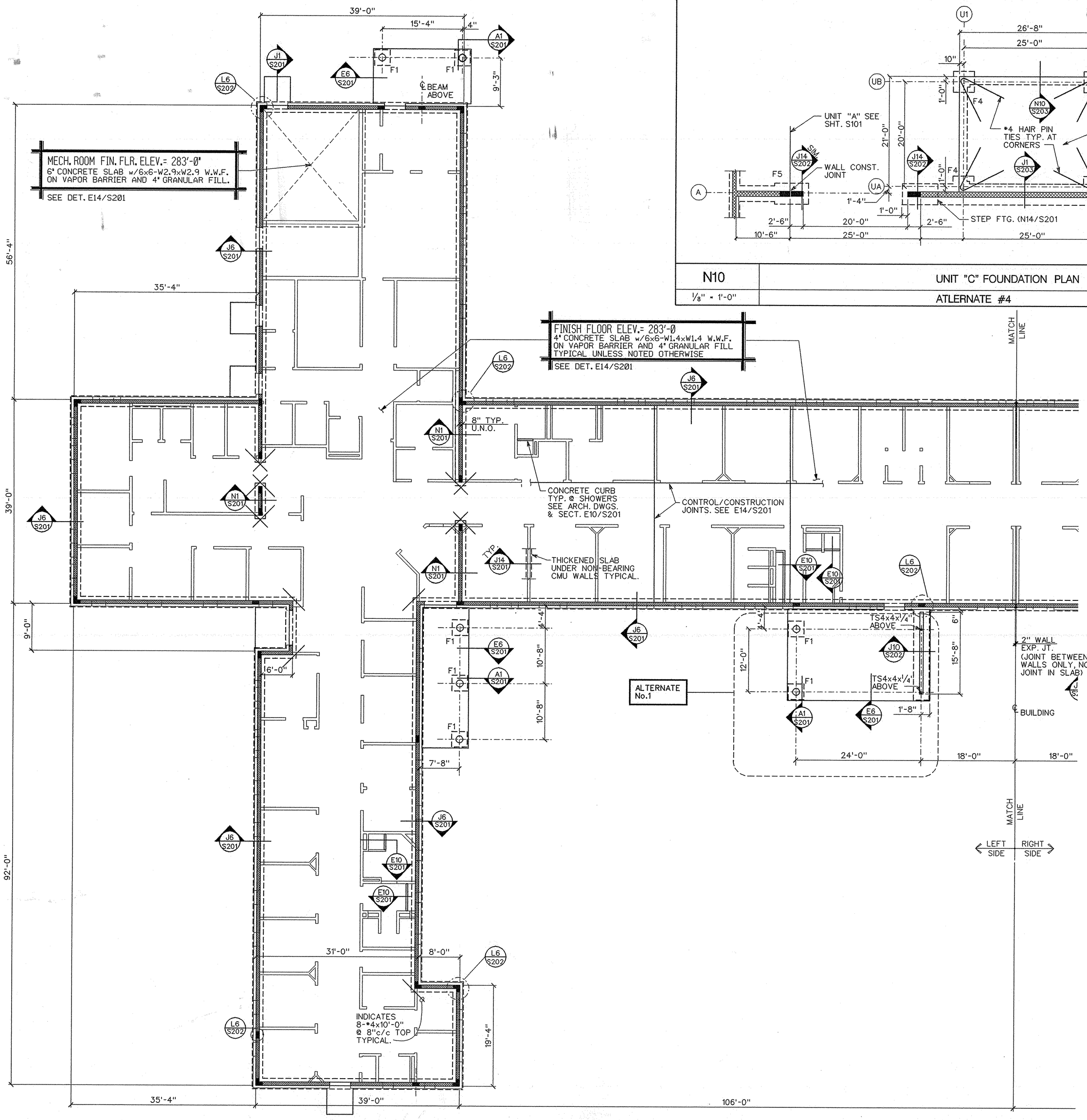

A1 | FOUNDATION /FIRST FLOOR PLAN – UNIT "B" HOUSING POD BUILDING (LEFT SIDE)

1/8" = 1'-0"

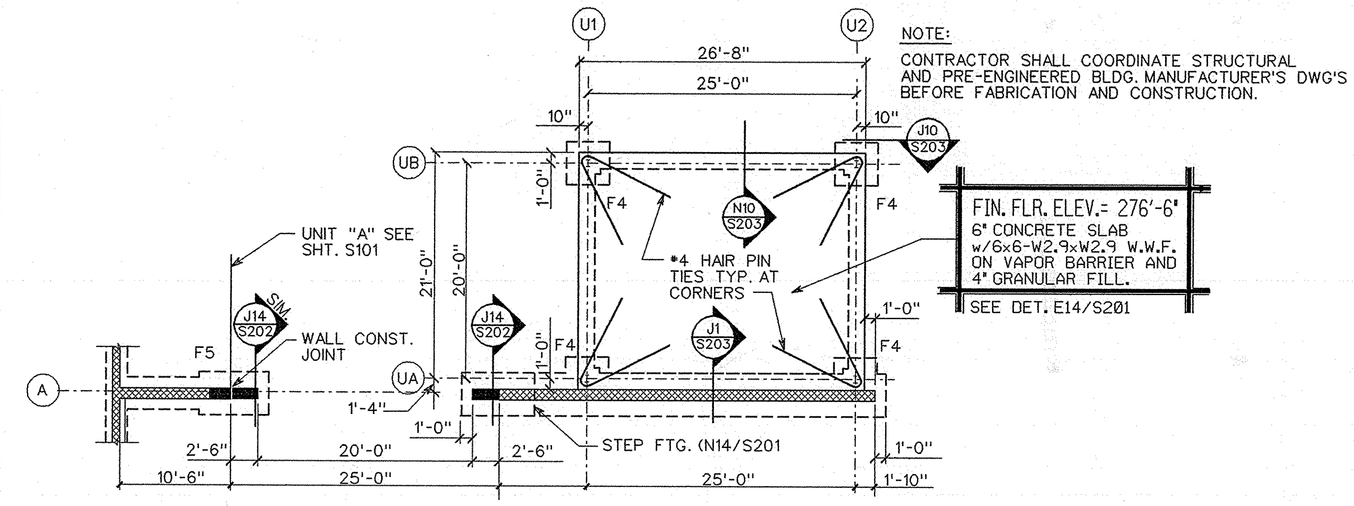

NOTE:
CONTRACTOR SHALL COORDINATE STRUCTURAL AND PRE-ENGINEERED BLDG. MANUFACTURER'S DWG'S BEFORE FABRICATION AND CONSTRUCTION.

N10 | UNIT "C" FOUNDATION PLAN

1/8" = 1'-0" | ATLERNATE #4

NOTES

1.) FOR COLUMN FOOTING SCHEDULE SEE A14/S201.

2.) FOR UNIT "C" COLUMN BASE PLATE AND ANCHOR BOLT SCHEDULE, SEE METAL BLD'G. DRAWINGS.

3.) FOR BOND BEAM & PRECAST LINTEL BEAM SCHEDULE SEE G1/S202.

4.) FOR DIMENSIONS NOT SHOWN SEE ARCHITECTURAL DRAWINGS.

5.) FOR TYPICAL CMU WALL & WALL FOOTING DETAILS SEE SHEET S202.

6.) SEE ARCH. DWGS. FOR RECESSED /SLOPED SLABS AT SHOWERS AND FLOOR DRAIN LOCATIONS.

7.) ALTERNATE No.1 - CANOPY COLUMN AND PORCH SLAB.

8.) FOR MECH. PAD SECTION SEE A14/S202.

KEY LEGEND

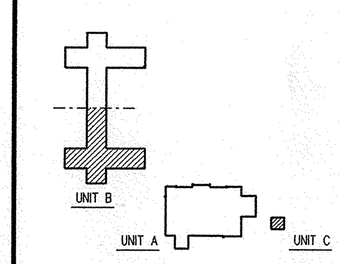

McCARTY ARCHITECTS
PROFESSIONAL ASSOCIATION
TELEPHONE: (601) 844-4400
FAX: (601) 844-0500
OFFICE ADDRESS: 533 WEST MAIN STREET TUPELO, MS 38801
MAILING ADDRESS: P. O. BOX 440 TUPELO, MS 38802

PROJECT NO: • 94123
CAD FILE NO: •
DATE ISSUED: • 20 JUN. 97
DRAWN BY: • J.S./R.L.W.
CHECKED BY: • T.S.
REVISION/DATE: •

PROJECT TITLE
DEPARTMENT OF MENTAL HEALTH
REGIONAL PSYCHIATRIC HOSPITAL
GS# 400-010
TUPELO, MISSISSIPPI

STRUCTURE
Stanley D. Lindsey & Associates, Ltd.
STRUCTURAL ENGINEERS
2244 Metrocenter Blvd., Suite 208
Nashville, Tennessee 37228-1320
Project Number 95-3490

SHEET NUMBER
S102
29 of 102

Plot Date: