ITS Mississippi Department of Information Technology Services

RFP No: 3590

INVITATION: Sealed proposals, subject to the attached conditions, will be received at this office until **November 24, 2009 @ 3:00 p.m.** Central Time for the acquisition of the products/services described below for Mississippi Department of Education.

Comprehensive Statewide Student Information System

A mandatory Vendor Conference will be held at10:00 AM Central Time, on October 12, 2009, at the Mississippi Department of Education, Central High School Building Auditorium, 359 North West Street, Jackson, Mississippi 39201

The Vendor must submit proposals and direct inquiries to:

Debra Spell
Technology Consultant
Information Technology Services
Suite 508, 301 N. Lamar Street
Jackson, MS 39201-1495
(601) 359-2632
debra.spell@its.ms.gov

To prevent opening by unauthorized individuals, all copies of the proposal must be sealed in the package. The following must be clearly typed on a label affixed to the package in a clearly visible location:

PROPOSAL, SUBMITTED IN RESPONSE TO
RFP NO. 3590
due November 24, 2009 @ 3:00 p.m.,
ATTENTION: Debra Spell

David L. Litchliter
Executive Director, ITS

ITS RFP Response Checklist

RFP Response Checklist: These items should be included in your response to RFP 3590.

_____ 1) One clearly marked original response and ten (10) identical copy/copies of the complete proposal. Label the front and spine of the three-ring loose-leaf binder with the Vendor name and RFP number. Include the items listed below inside the binder. Please DO NOT include a copy of the RFP in the binder.

_____ 2) *Submission Cover Sheet*, signed and dated. (Section I)

_____ 3) *Proposal Bond*, if applicable (Section I)

_____ 4) *Proposal Exception Summary*, if applicable (Section V)

_____ 5) Vendor response to *RFP Questionnaire* (Section VI)

_____ 6) Point-by-point response to *Technical Specifications* (Section VII)

_____ 7) Vendor response to *Cost Information Submission* (Section VIII)

_____ 8) *References* (Section IX)

Table of Contents

SECTION I 4
SUBMISSION COVER SHEET & CONFIGURATION SUMMARY 4
PROPOSAL BONDS 5
SECTION II 6
PROPOSAL SUBMISSION REQUIREMENTS 6
SECTION III 10
VENDOR INFORMATION 10
SECTION IV 15
LEGAL AND CONTRACTUAL INFORMATION 15
SECTION V 28
PROPOSAL EXCEPTIONS 28
PROPOSAL EXCEPTION SUMMARY FORM 30
SECTION VI 31
RFP QUESTIONNAIRE 31
SECTION VII 34
TECHNICAL SPECIFICATIONS 34
SECTION VIII 239
COST INFORMATION SUBMISSION 239
SECTION IX 246
REFERENCES 246
REFERENCE FORM 247
SUBCONTRACTOR REFERENCE FORM 248
ATTACHMENT A 249
STANDARD CONTRACTS 249
ATTACHMENT B 306
FORMS 306
ATTACHMENT C 309
MODEL FORM 4 309
ATTACHMENT D 333
ADDITIONAL FORMS 333
ATTACHMENT E 336
BUSINESS RULES 336
ATTACHMENT F 378
INDIVIDUALIZED FAMILY SERVICE PLAN 378
ATTACHMENT G 401
VENDOR NOTIFICATION OF INTENT TO PROPOSE 401
ATTACHMENT H 402
SYSTEM COMPONENTS DIAGRAMS 402

SECTION I
SUBMISSION COVER SHEET & CONFIGURATION SUMMARY

Provide the following information regarding the person responsible for the completion of your proposal. This person should also be the person the Mississippi Department of Information Technology Services, (**ITS**), should contact for questions and/or clarifications.

Name	_____	Phone #	_____
Address	_____	Fax #	_____
	_____	E-mail	_____

Subject to acceptance by **ITS**, the Vendor acknowledges that by submitting a proposal AND signing in the space indicated below, the Vendor is contractually obligated to comply with all items in this Request for Proposal (RFP), including the Standard Contract in Attachment A if included herein, except those listed as exceptions on the Proposal Exception Summary Form. If no *Proposal Exception Summary Form* is included, the Vendor is indicating that he takes no exceptions. This acknowledgement also contractually obligates any and all subcontractors that may be proposed. Vendors who sign below may not later take exception to any point during contract negotiations. The Vendor further certifies that the company represented here is an authorized dealer in good standing of the products/services included in this proposal.

_____/_____
Original signature of Officer in Bind of Company/Date

Name (typed or printed)	_____
Title	_____
Company name	_____
Physical address	_____
	_____
State of Incorporation	_____

CONFIGURATION SUMMARY

The Vendor must provide a summary of the main components of products/services offered in this proposal using 100 words or less.

PROPOSAL BONDS

Please refer to Item No. 36, "Proposal Bond" in Section IV to determine if a Proposal Bond is required for this procurement. If required, please attach the bond here.

SECTION II
PROPOSAL SUBMISSION REQUIREMENTS

The objective of the Proposal Submission Requirements section is to provide Vendors with the information required to submit a response to this Request for Proposal (RFP). A Vendor who has responded to previous RFPs issued by **ITS** should not assume that the requirements are the same, as changes may have been made.

1. Failure to follow any instruction within this RFP may, at the State's sole discretion, result in the disqualification of the Vendor's proposal.

2. The State has no obligation to locate or acknowledge any information in the Vendor's proposal that is not presented under the appropriate outline according to these instructions and in the proper location.

3. The Vendor's proposal must be received, in writing, by the office of **ITS** by the date and time specified. **ITS** is not responsible for any delays in delivery or expenses for the development or delivery of proposals. Any proposal received after proposal opening time will be returned unopened.

4. Proposals or alterations by fax, e-mail, or phone will not be accepted.

5. Original signatures are required on one copy of the Submission Cover Sheet and Configuration Summary, and the Vendor's original submission must be clearly identified as the original. The Vendor's original proposal must include the Proposal Bond, (if explicitly required in Section IV).

6. **ITS** reserves the right to reject any proposals, including those with exceptions, prior to and at any time during negotiations.

7. **ITS** reserves the right to waive any defect or irregularity in any proposal procedure.

8. The Vendor may intersperse their response following each RFP specification but must not otherwise alter or rekey any of the original text of this RFP. If the State determines that the Vendor has altered any language in the original RFP, the State may, in its sole discretion, disqualify the Vendor from further consideration. The RFP issued by **ITS** is the official version and will supersede any conflicting RFP language submitted by the Vendor.

   The Vendor must conform to the following standards in the preparation of the Vendor's proposal:

   8.1 The Vendor is required to submit one clearly marked original response, ten (10) identical copy/copies, and an electronic copy of the complete proposal, including all sections and attachments, in three-ring binders.

8.2 To prevent opening by unauthorized individuals, all copies of the proposal must be sealed in the package. A label containing the information on the RFP cover page must be clearly typed and affixed to the package in a clearly visible location.

8.3 Number each page of the proposal.

8.4 Respond to the sections and attachments in the same order as this RFP.

8.5 Label and tab the responses to each section and Attachment, using the corresponding headings from the RFP.

8.6 If the Vendor does not agree with any item in any section, then the Vendor must list the item on the *Proposal Exception Summary Form*. (See Section V for additional instructions regarding Vendor exceptions.)

8.7 Occasionally, an outline point in an attachment requests information which is not applicable to the products/services proposed. If the Vendor is certain the point does not apply to the given RFP, the Vendor should respond with "NOT APPLICABLE."

8.8 Where an outline point asks a question or requests information, the Vendor must respond with the <u>specific</u> answer or information requested.

8.9 When an outline point/attachment is a statement provided for the Vendor's information only, the Vendor need only read that point. The Vendor acknowledges having read and accepting, or taking exception to, all sections by signing the *Submission Cover Sheet* and providing a *Proposal Exception Summary Form*.

8.10 Where a minimum requirement has been identified, respond by stating the item (e.g., device name/model number, guaranteed response time) proposed and how it will meet the specifications.

8.11 The Vendor must fully respond to <u>each</u> requirement within the *Technical Specifications* by fully describing the manner and degree by which the proposal meets or exceeds said requirements.

9. It is the responsibility of the Vendor to clearly identify all costs associated with any item or series of items in this RFP. The Vendor must include and complete all parts of the cost proposal in a clear and accurate manner. **Omissions, errors, misrepresentations, or inadequate details in the Vendor's cost proposal may be grounds for rejection of the Vendor's proposal. Costs that are not clearly identified will be borne by the Vendor.** The Vendor must complete the *Cost Information Submission* in this RFP, which

outlines the minimum requirements for providing cost information. The Vendor should supply supporting details as described in the *Cost Information Submission*.

10. **ITS** reserves the right to request additional information or clarification of a Vendor's proposal. The Vendor's cooperation during the evaluation process in providing **ITS** staff with adequate responses to requests for clarification will be considered a factor in the evaluation of the Vendor's overall responsiveness. Lack of such cooperation or failure to provide the information in the manner required may, at the State's discretion, result in the disqualification of the Vendor's proposal.

11. Unsolicited clarifications and updates submitted after the deadline for proposals will be accepted or rejected at the sole discretion of **ITS**.

12. Unsolicited clarifications in the evaluation and selection of lowest and best proposal will be considered only if all the following conditions are met:

    12.1 A clarification to a proposal that includes a newly announced product line or service with equal or additional capability to be provided at or less than the proposed price will be considered.

    12.2 Information provided must be in effect nationally and have been formally and publicly announced through a news medium that the Vendor normally uses to convey customer information.

    12.3 Clarifications must be received early enough in the evaluation process to allow adequate time for re-evaluation.

    12.4 The Vendor must follow procedures outlined herein for submitting updates and clarifications.

    12.5 The Vendor must submit a statement outlining the circumstances for the clarification.

    12.6 The Vendor must submit one clearly marked original and ten (10) copies of the clarification.

    12.7 The Vendor must be specific about which part of the original proposal is being changed by the clarification (i.e., must include exact RFP reference to section and outline point).

13. **Communications with State**

From the issue date of this RFP until a Vendor is selected and the selection is announced, responding Vendors or their representatives may not communicate, either orally or in writing regarding this RFP with any statewide elected official, state officer or employee, member of the legislature or legislative employee except as noted herein. To ensure

equal treatment for each responding Vendor, all questions regarding this RFP must be submitted in writing to the State's contact person for the selection process, and not later than the last date for accepting responding Vendor questions provided in this RFP. All such questions will be answered officially by the State in writing. All such questions and answers will become addenda to this RFP, and they will be posted to the ITS web site. Vendors failing to comply with this requirement will be subject to disqualification.

13.1 The State's contact person for the selection process is: Debra Spell, Technology Consultant, 301 North Lamar Street, Ste. 508, Jackson, MS 39201, 601-359-2632, debra.spell@its.ms.gov.

13.2 Vendor may consult with State representatives as designated by the State's contact person identified in 13.1 above in response to State-initiated inquiries. Vendor may consult with State representatives during scheduled oral presentations and demonstrations excluding site visits.

SECTION III
VENDOR INFORMATION

The objective of the Vendor Information section of this RFP is to provide Vendors with information required to respond to the RFP successfully.

1. **Interchangeable Designations**

   The terms "Vendor" and "Contractor" are referenced throughout this RFP. Generally, references to the "Vendor" are used in conjunction with the proposing organization and procurement process leading up to the final RFP selection and award. The term "Contractor" denotes the role assumed, post-award, by the winning Vendor. Additionally, the terms "State of Mississippi," "State" or "ITS" may be used interchangeably throughout this RFP to denote the political entity issuing the RFP and requesting responses from Vendors throughout these specifications. References to a specific agency, institution or other political entity represent the client or customer on whose behalf ITS is issuing the RFP.

2. **Vendor's Responsibility to Examine RFP**

   Vendors must examine all documents, forms, specifications, standard provisions, and instructions.

3. **Proposal as Property of State**

   All written proposal material becomes the property of the State of Mississippi.

4. **Written Amendment to RFP**

   Any interpretation of an **ITS** RFP will be made by written amendment only. The State will not be responsible for any other explanation of this RFP. A copy of any amendment will be posted on the **ITS** website, together with the associated RFP specification. Vendors are required to check the **ITS** website periodically for RFP amendments before the proposal opening date at: http://www.its.ms.gov/rfps/rfps_awaiting.shtml.

   Any and all amendments will be posted no later than noon, seven days prior to the proposal opening date listed on the cover page of this RFP. Should you be unable to access the **ITS** website, you may contact the **ITS** technology consultant listed on page one of this RFP and request a copy.

5. **Oral Communications Not Binding**

   Only transactions which are in writing from **ITS** may be considered official. No negotiations, decisions, or actions shall be executed by any Vendor as a result of any discussions with any State employee.

6. **Vendor's Responsibility for Delivery**

   Vendors must ensure, through reasonable and sufficient follow-up, proper compliance with, and fulfillment of all schedules and deliverables specified within the body of this

RFP. The State will not be responsible for the failure of any delivery medium for submission of information to or from the Vendor, including but not limited to, public and private carriers, U.S. mail, Internet Service Providers, facsimile, or e-mail.

7. **Evaluation Criteria**

The State's intent in issuing this RFP is to award a contract to the lowest and best responsive Vendor who meets specifications, considering price and other factors. The Vendor's past performance, cooperation, and ability to provide service and training are general factors that will be weighed in the selection process. More specific information concerning evaluation criteria is presented in *Technical Specifications*.

8. **Multiple Awards**

ITS reserves the right to make multiple awards.

9. **Right to Award in Whole or Part**

ITS reserves the right to approve an award by individual items or in total, whichever is deemed to be in the best interest of the State of Mississippi.

10. **Right to Use Proposals in Future Projects**

The State reserves the right to evaluate the awarded proposal from this RFP, including all products and services proposed therein, along with the resulting contractual terms, for possible use in future projects if (a) it is deemed to be in the best interest of the State to do so; and (b) the Vendor is willing to extend a cost less than or equal to that specified in the awarded proposal and resulting contract. A decision concerning the utilization of a Vendor's proposal for future projects is solely at the discretion of the State and requires the agreement of the proposing Vendor. The State's decision to reuse an awarded proposal will be based upon such criteria as: (1) the customer's business requirements; (2) elapsed time since the award of the original project; and/or (3) research on changes in the Vendor, market, and technical environments since the initial award.

11. **Price Changes During Award or Renewal Period**

A price increase will not be accepted during the award period or the renewal period, unless stipulated in the contract. However, the State will always take advantage of price decreases.

12. **Right to Request Information**

The State reserves the right to request information relative to a Vendor's references and financial status and to visit a Vendor's facilities during normal working hours. The State also reserves the right to request a current financial statement, prepared and certified by an independent auditing firm, and reserves the right to require that Vendors document their financial ability to provide the products and services proposed up to the total dollar amount of the Vendor's cost proposal. The State reserves the right to request information about the Vendor from any previous customer of the Vendor of whom the State is aware, even if that customer is not included in the Vendor's list of references.

13. **Vendor Personnel**

For RFPs including professional services specifications, the Vendor will be required to provide and/or certify the following for each individual included in the Vendor's proposal:

13.1 A direct telephone number at which the individual may be contacted for a telephone interview. The State will pay toll charges in the continental United States. The Vendor must arrange a toll-free number for all other calls.

13.2 That, if onsite interviews are required, the individual can be at the specified location in Mississippi within the timeframe specified. All costs associated with onsite interviews will be the responsibility of the Vendor.

13.3 That the individual is proficient in spoken and written English;

13.4 That the individual is a U.S. citizen or that the individual meets and will maintain employment eligibility requirements in compliance with all INS regulations. The Vendor must provide evidence of identification and employment eligibility prior to the award of a contract that includes any personnel who are not U. S. citizens.

13.5 That the personnel assigned to a project will remain a part of the project throughout the duration of the contract as long as the personnel are employed by the Vendor, unless replaced by the Vendor at the request of the State. This requirement includes the responsibility for ensuring all non-citizens maintain current INS eligibility throughout the duration of the contract.

14. **Vendor Imposed Constraints**

The Vendor must specifically document what limitations, if any, exist in working with any other Contractor acting in the capacity of the State's business partner, subcontractor or agent who may be managing any present or future projects; performing quality assurance; integrating the Vendor's software; and/or providing web-hosting, hardware, networking or other processing services on the State's behalf. The project relationship may be based on roles as either equal peers; supervisory – subordinate; or subordinate – supervisory, as determined by the State. The State recognizes that the Vendor may have trade secrets, intellectual property and/or business relationships that may be subject to its corporate policies or agreements. The State must understand these issues in order to decide to what degree they may impact the State's ability to conduct business for this project. These considerations will be incorporated accordingly into the proposal evaluation and selection process. The understanding reached between the Vendor and the State with regard to this business relationship precludes the Vendor from imposing any subsequent limitations of this type in future project undertakings by the State.

15. **Best and Final Offer**

The State reserves the right to solicit Best and Final Offers (BAFOs) from Vendors, principally in situations in which proposal costs eclipse available funding or the State believes none of the competing proposals presents a Best Value (lowest and best proposal) opportunity. Because of the time and expense incurred by both the Vendor community and the State, BAFOs are not routinely conducted. Vendors should offer their best pricing with the initial solicitation. Situations warranting solicitation of a BAFO will be considered an exceptional practice for any procurement. Vendors that remain in a competitive range within an evaluation may be requested to tender Best and Final Offers, at the sole discretion of the State. All such Vendors will be provided an equal opportunity to respond with a Best and Final Offer under a procedure to be defined by the State that encompasses the specific, refined needs of a project, as part of the BAFO solicitation. The State may re-evaluate and amend the original project specifications should it be deemed necessary in order to improve the opportunity for attaining Best Value scenarios from among the remaining competing Vendors. All BAFO proceedings will be uniformly conducted, in writing and subject to solicitation by the State and receipt from the Vendors under a precise schedule.

16. **Restriction on Advertising**

The Vendor must receive written approval from the State before advertising or referencing the award of the contract or the services being provided. The Vendor must agree not to refer to awards in commercial advertising in such a manner as to state or imply that the firm or its services are endorsed or preferred by the State of Mississippi.

17. **Rights Reserved to Use Existing Product Contracts**

The State reserves the right on turnkey projects to secure certain products from other existing **ITS** contracts if it is in its best interest to do so. If this option is exercised, then the awarded Vendor must be willing to integrate the acquisition and implementation of such products within the schedule and system under contract.

18. **Additional Information to be Included**

In addition to answering each specification within this RFP, the Vendor must include complete product/service information, including product pictorials and technical/descriptive literature relative to any product/service offered with the proposal. Information submitted must be sufficiently detailed to substantiate that the products/services offered meet or exceed specifications.

19. **Valid Contract Required to Begin Work**

The successful Vendor should not commence any billable work until a valid contract has been executed. Any work done by the successful Vendor prior to the execution of the

contract is done at the Vendor's sole risk. The State is under no obligation to pay for work done prior to the execution of a contract.

SECTION IV
LEGAL AND CONTRACTUAL INFORMATION

The objective of the *Legal and Contractual Information* section is to provide Vendors with information required to complete a contract or agreement with **ITS** successfully.

1. **Acknowledgment Precludes Later Exception**

By signing the *Submission Cover Sheet*, the Vendor is contractually obligated to comply with all items in this RFP, including the *Standard Contract* in Attachment A if included herein, except those specifically listed as exceptions on the *Proposal Exception Summary Form*. If no *Proposal Exception Summary Form* is included, the Vendor is indicating that he takes no exceptions. Vendors who respond to this RFP by signing the *Submission Cover Sheet* may not later take exception to any item in the RFP during contract negotiations. This acknowledgement also contractually obligates any and all subcontractors that may be proposed. No exceptions by subcontractors or separate terms and conditions will be entertained after the fact.

2. **Failure to Respond as Prescribed**

Failure to respond as described in Section II: *Proposal Submission Requirements* to any item in the sections and attachments of this RFP, including the *Standard Contract* attached as Attachment A, if applicable, shall contractually obligate the Vendor to comply with that item.

3. **Contract Documents**

ITS will be responsible for all document creation and editorial control over all contractual documentation related to each procurement project. The following documents will normally be included in all contracts between **ITS** and the Vendor:

3.1 The Proposal Exception Summary Form as accepted by **ITS**;

3.2 Contracts which have been signed by the Vendor and **ITS**;

3.3 **ITS'** Request for Proposal, including all addenda;

3.4 Official written correspondence from **ITS** to the Vendor;

3.5 Official written correspondence from the Vendor to **ITS** when clarifying the Vendor's proposal; and

3.6 The Vendor's proposal response to the **ITS** RFP.

4. **Order of Precedence**

When a conflict arises regarding contract intent due to conflicting statements in documents included in the contract, the order of precedence of each document is as listed

above unless modification of order is negotiated and agreed upon by both **ITS** and the winning Vendor.

5. **Additional Contract Provisions**

The contract will also include such additional provisions, which are not inconsistent or incompatible with the material terms of this RFP, as may be agreed upon by the parties. All of the foregoing shall be in such form and substance as prescribed by the State.

6. **Contracting Agent by Law**

The Executive Director of **ITS** is, by law, the purchasing and contracting agent for the State of Mississippi in the negotiation and execution of all contracts for the acquisition of computer and telecommunications equipment, systems, software, and services (Section 25-53-1, et seq., of the Mississippi Code Annotated). **ITS** is issuing this RFP on behalf of the procuring agency or institution. **ITS** and the procuring agency or institution are sometimes collectively referred to within this RFP as "State."

7. **Mandatory Legal Provisions**

7.1 The State of Mississippi is self-insured; all requirements for the purchase of casualty or liability insurance are deleted.

7.2 Any provisions disclaiming implied warranties shall be null and void. See Mississippi Code Annotated Sections 11-7-18 and 75-2-719(4). The Vendor shall not disclaim the implied warranties of merchantability and fitness for a particular purpose.

7.3 The Vendor shall have no limitation on liability for claims related to the following items:

7.3.1 Infringement issues;

7.3.2 Bodily injury;

7.3.3 Death;

7.3.4 Physical damage to tangible personal and/or real property; and/or

7.3.5 The intentional and willful misconduct or negligent acts of the Vendor and/or Vendor’s employees or subcontractors.

7.4 All requirements that the State pay interest (other than in connection with lease-purchase contracts not exceeding five years) are deleted.

7.5 Any contract negotiated under this RFP will be governed by and construed according to the laws of the State of Mississippi. Venue for the resolution of any dispute shall be Jackson, Hinds County, Mississippi.

7.6 Any contract negotiated under this RFP is cancelable in the event the funding authority does not appropriate funds. Notice requirements to Vendor cannot exceed sixty (60) days.

7.7 The State of Mississippi does not waive its sovereign immunities or defenses as provided by law by entering into this contract with the Vendor, Vendor agents, subcontractors, or assignees.

7.8 The State will deliver payments to the Vendor within forty-five (45) days after receipt of invoice and receipt, inspection, and approval of Vendor's products/services. No late charges will exceed 1.5% per month on any unpaid balance from the expiration of said period until payment is delivered. See Section 31-7-305 of the Mississippi Code Annotated. Seller understands and agrees that Purchaser is exempt from the payment of taxes.

7.9 The State shall not pay any attorney's fees, prejudgment interest or the cost of legal action to or for the Vendor.

8. Approved Contract

8.1 Award of Contract - A contract is considered to be awarded to a proposer once the proposer's offering has been approved as lowest and best proposal through:

8.1.1 Written notification made to proposers on **ITS** letterhead, or

8.1.2 Notification posted to the **ITS** website for the project, or

8.1.3 CP-1 authorization executed for the project, or

8.1.4 The **ITS** Board's approval of same during an open session of the Board.

8.2 **ITS** statute specifies whether **ITS** Director approval or **ITS** Board approval is applicable for a given project, depending on the total lifecycle cost of the contract.

8.3 A contract is not deemed final until five (5) working days after either the award of contract or post procurement review, as stipulated in the **ITS** Protest Procedure and Policy. In the event of a valid protest, the State may, at its sole discretion, continue the procurement or stay the procurement in accordance

with the **ITS** Protest Procedure and Policy. If the procurement is stayed, the contract is not deemed final until the protest is resolved.

9. **Contract Validity**
All contracts are valid only if signed by the Executive Director of **ITS**.

10. **Order of Contract Execution**
Vendors will be required to sign contracts and to initial all contract changes before the Executive Director of **ITS** signs.

11. **Availability of Funds**
All contracts are subject to availability of funds of the acquiring State entity and are contingent upon receipt by the winning Vendor of a purchase order from the acquiring State entity.

12. **CP-1 Requirement**
All purchase orders issued for goods and services acquired from the awarded Vendor under this RFP must be encoded by the Customer agency with a CP-1 approval number assigned by **ITS**. This requirement does not apply to acquisitions that by policy have been delegated to State entities.

13. **Requirement for Electronic Payment and Invoicing**

13.1 Payments to the awarded Vendor for all goods and services acquired under this RFP by state agencies that make payments through the Statewide Automated Accounting System ("SAAS") will be made electronically, via deposit to the bank account of the Vendor's choice. The awarded Vendor must enroll and be activated in PayMode™, the State's current vehicle for sending and receiving electronic payments, prior to receiving any payments from state agencies. There is no charge for a Vendor to enroll or receive payments via PayMode. For additional information on PayMode, including registration instructions, Vendors should visit the following website: http://portal.paymode.com/ms/. Vendors may also request assistance from the Mississippi Management and Reporting System (MMRS) Call Center regarding PayMode registration by contacting mash@dfa.state.ms.us.

13.2 For state agencies that make payments through SAAS, the awarded Vendor is required to submit electronically all invoices for goods and services acquired under this RFP, along with appropriate supporting documentation, as directed by the State. Should the requirement for electronic invoicing be implemented during the term of the project contract, the State will work with the Vendor to determine a reasonable timeframe for initiating electronic invoicing.

13.3 Items 13.1 and 13.2 only apply to state agencies that make payments through SAAS. Payments and invoices for all other entities will conform to their standard methods of payment to contractors.

14. Time For Negotiations

14.1 All contractual issues must be successfully negotiated within fifteen (15) working days from the Vendor's initial receipt of the project contract from **ITS,** unless **ITS** consents to extend the period. Failure to complete negotiations within the stated time period constitutes grounds for rejection of the Vendor's response to this RFP. **ITS** may withdraw the proposal award and begin negotiations with the next ranked Vendor immediately or pursue any other option.

14.2 Negotiations shall be limited to items to which the Vendor has noted as exceptions on their Proposal Exception Summary Form, as well as any new items that the State may require. All contract changes requested by the Vendor related to such exceptions noted in Vendor's proposal shall be submitted three (3) working days prior to scheduled negotiations, unless **ITS** consents to a different period.

15. Prime Contractor

The selected Vendor will be designated the prime contractor in the proposal, and as such, shall be solely responsible for all products/services offered in the proposal and for the fulfillment of the contract with the State.

16. Sole Point of Contact

ITS will consider the selected Vendor to be the sole point of contact with regard to contractual matters, including payment of any and all charges resulting from the contract.

16.1 The Vendor must acknowledge and agree that in matters of proposals, clarifications, negotiations, contracts and resolution of issues and/or disputes, the Vendor represents all contractors, third parties and/or subcontractors the Vendor has assembled for this project. The Vendor's commitments are binding on all such parties and consequently the State is only required to negotiate with the Vendor.

16.2 Furthermore, the Vendor acknowledges and agrees to pass all rights and/or services related to all general consulting, services leasing, software licensing, warranties, hardware maintenance and/or software support to the State from any contractor, third party or subcontractor without the State having to negotiate separately or individually with any such parties for these terms or conditions.

16.3 Should a proposing Vendor wish to assign payment of any or all charges resulting from this contract to a third party, Vendor must disclose that fact in his/her proposal, along with the third party's name, address, nature of business, and relationship to the proposing Vendor, the reason for and purpose of the assignment, and all conditions of the assignment, including but not limited to a copy of an assignment document to be executed by the State, the Vendor, and the third party. Such assignments will be accepted or rejected at the sole discretion of the State. Vendor must clearly and definitively state in his/her proposal whether the proposal is contingent upon the requested assignment of payments. Whenever any assignment of payment is requested, the proposal, contract, and assignment document must include language specifically guaranteeing that the proposing Vendor is solely and fully liable and responsible for the performance of its obligations under the subject contract. No assignment of payment will be considered at the time of purchase unless such assignment was fully disclosed in the Vendor's proposal and subsequently accepted by the State.

17. **ITS Approval of Subcontractor Required**

Unless provided in the contract, the Vendor shall not contract with any other party for furnishing any of the contracted work or services without the consent, guidance, and written approval of the State. **ITS** reserves the right of refusal and the right to request replacement of a subcontractor due to unacceptable work or conduct. This provision should not be interpreted as requiring the approval of individual contracts of employment between the Vendor and personnel assigned for services under the contract.

18. **Inclusion of Subcontract Agreements**

Copies of any agreements to be executed between the Vendor and any subcontractors must be included in the Vendor's proposal.

19. **Negotiations with Subcontractor**

In order to protect the State's interest, **ITS** reserves the right to attempt to resolve the contractual disagreements that may arise between the Vendor and its subcontractor after award of the contract.

20. **References to Vendor to Include Subcontractor**

All references in the RFP to "Vendor" shall be construed to encompass both the Vendor and its subcontractors.

21. **Outstanding Vendor Obligations**

21.1 Any Vendor who presently owes the State of Mississippi money pursuant to any contract for which **ITS** is the contracting agent and who has received written notification from **ITS** regarding the monies owed, must submit, with the proposal, a certified check in the amount due and owing in order for the

proposal in response to this RFP to be considered. For a Vendor currently in bankruptcy as of the RFP submission date, this requirement is met, if and only if, **ITS** has an active petition before the appropriate bankruptcy court for recovery of the full dollar amount presently owed to the State of Mississippi by that Vendor. If the Vendor has emerged from bankruptcy by the RFP submission date, the Vendor must pay in full any amount due and owing to the State, as directed in the court-approved reorganization plan, prior to any proposal being considered.

21.2 Any Vendor who is presently in default on existing contracts for which **ITS** is the contracting agent, or who otherwise is delinquent in the performance of any such contracted obligations, is in the sole judgment of the State required to make arrangement for fulfilling outstanding obligations to the satisfaction of the State in order for the proposal to be considered.

21.3 The State, at its sole discretion, may reject the proposal of a Vendor with any significant outstanding financial or other obligations to the State or who is in bankruptcy at the time of proposal submission.

22. **Equipment Condition**

For all RFPs requiring equipment, the Vendor must furnish only new equipment in response to **ITS** specifications, unless an explicit requirement for used equipment is otherwise specified.

23. **Delivery Intervals**

The Vendor's proposal must specify, in the *Cost Information Submission* and in response to any specific instructions in the *Technical Specifications*, delivery and installation intervals after receipt of order.

24. **Pricing Guarantee**

The Vendor must explicitly state, in the *Cost Information Submission* and in response to any specific instructions in the *Technical Specifications*, how long the proposal will remain valid. Unless stated to the contrary in the *Technical Specifications*, pricing must be guaranteed for a minimum of ninety (90) days.

25. **Shipping Charges**

For all RFPs requiring shipment of any product or component, all products must be delivered FOB destination to any location within the geographic boundaries of the State with all transportation charges prepaid and included in the RFP proposal or LOC quotation. Destination is the point of use.

26. **Amortization Schedule**

For all RFPs requiring equipment, contracts involving the payment of interest must include an amortization schedule clearly documenting the amount of interest payable over the term of the contract.

27. **Americans with Disabilities Act Compliance for Web Development and Portal Related Services**

All Web and Portal development work must be designed and implemented in compliance with the Electronic and Information Technology Accessibility Standards associated with Section 508 of the Rehabilitation Act and with the Web Accessibility Initiative (WAI) of the W3C.

28. **Ownership of Developed Software**

28.1 When specifications require the Vendor to develop software for the State, the Vendor must acknowledge and agree that the State is the sole owner of such developed software with exclusive rights to use, alter, or distribute the software without restriction. This requirement applies to source code, object code, and documentation.

28.2 The State may be willing to grant the Vendor a nonexclusive license to use the State's software subject to devising acceptable terms and license fees. This requirement is a matter of State Law, and not negotiable.

29. **Ownership of Custom Tailored Software**

In installations where the Vendor's intellectual property is modified and custom-tailored to meet the needs of the State, the Vendor must offer the State an application license entitling the State to use, and/or alter the software without restriction. These requirements apply to source code, object code and documentation.

30. **Terms of Software License**

The Vendor acknowledges and agrees that the term of all software licenses provided to the State shall be perpetual unless stated otherwise in the Vendor's proposal.

31. **The State is Licensee of Record**

The Vendor must not bypass the software contracting phase of a project by licensing project software intended for State use in its company name. Upon award of a project, the Vendor must ensure that the State is properly licensed for all software that is proposed for use in a project.

32. **Remote Access via Virtual Private Network**

Vendor must understand that the State of Mississippi's Enterprise Security Policy mandates that all remote access to and/or from the State network must be accomplished via a Virtual Private Network (VPN). If remote access is required at any time during the life of this Agreement, Vendor and the State agree to implement/maintain a VPN for this connectivity. This required VPN must be IPSec-capable (ESP tunnel mode) and will terminate on a Cisco VPN-capable device (i.e. VPN concentrator, PIX firewall, etc.) on the State's premises. Vendor agrees that it must, at its expense, implement/maintain a compatible hardware/software solution to terminate the specified VPN on the State's premises. The parties further understand and agree that the State protocol standard and

architecture are based on industry-standard security protocols and manufacturer engaged at the time of contract execution. The State reserves the right to introduce a new protocol and architecture standard and require the Vendor to comply with same, in the event the industry introduces a more secure, robust protocol to replace IPSec/ESP and/or there is a change in the manufacturer engaged.

33. **Negotiating with Next-Ranked Vendor**

Should the State cease doing business with any Vendor selected via this RFP process, for any reason, the State reserves the right to initiate negotiations with the next ranked Vendor.

34. **Disclosure of Proposal Information**

Vendors should be aware that any information in a proposal may be subject to disclosure or reproduction under the Mississippi Public Records Act of 1983, defined in Section 25-61-1 et seq. of the Mississippi Code Annotated. All disclosures of proposal information will be made in compliance with the **ITS** Public Records Procedures established in accordance with the Mississippi Public Records Act. The **ITS** Public Records Procedures are available in Section 019-010 of the **ITS** Procurement Handbook, on the **ITS** Internet site at: http://dsitspe01.its.ms.gov/its/procman.nsf/TOC4?OpenView or from **ITS** upon request.

As outlined in the Third Party Information section of the **ITS** Public Records Procedures, **ITS** will give written notice to any affected Vendor of a request to view or reproduce the Vendor's proposal or portion thereof. **ITS** will not, however, give such notice with respect to summary information prepared in connection with the State's review or evaluation of a Vendor's proposal, including, but not limited to, written presentations to the **ITS** Board or other approving bodies, and/or similar written documentation prepared for the project file. In addition, **ITS** will not provide third-party notice for requests for any contract executed as a result of this RFP, with the exception of information contained in contract exhibits identified and labeled as confidential during the contract negotiation process. **ITS** will provide third-party notice of requests for any such confidential exhibits to allow Vendor the opportunity to protect the information by court order as outlined in the **ITS** Public Records Procedures.

Summary information and contract terms, as defined above, become the property of **ITS**, who has the right to reproduce or distribute this information without notification.

Vendors should further be aware that requests for disclosure of proposal and contract information are sometimes received by **ITS** significantly after the proposal opening date. **ITS** will notify the signatory "Officer in Bind of Company" provided in Section I of this RFP for Notification of Public Records Requests in the event information is requested that your company might wish to consider protecting as a trade secret or as confidential commercial or financial information. If the "Officer in Bind of Company" should not be

used for notification of public records requests, Vendor should provide the alternative contact information in response to this RFP item.

35. **Risk Factors to be Assessed**

The State will assess risk factors that may initially exist within a given procurement and that may develop over the course of a procurement process as facts become known. The State, at its sole discretion, may employ the following mechanisms in mitigating these risks: proposal bonding, performance bonding, progress payment plan with retainage, inclusion of liquidated damages, and withholding payment for all portions of the products/services acquired until final acceptance. The Vendor must agree to incorporate any or all of the above terms and conditions into the customer agreement.

36. **Proposal Bond**

The Vendor must include a proposal bond in the amount of $50,000.00 with its RFP proposal. Vendor is specifically disallowed from taking exception to the proposal bond requirement. Proposals without proposal bonds will be rejected.

The security must be in the form of a bond, irrevocable letter of credit, certified check, or cashier's check (hereinafter, "security") payable to the Mississippi Department of Education, to be held by their contracting agent, the Mississippi Department of Information Technology Services, and must be placed in the front of the Vendor's proposal. The submission of an acceptable security is a condition precedent to a valid proposal, and the amount of the security is not negotiable or contestable. Any proposal received without the security will be rejected and returned to the Vendor without further consideration.

The security binds the Vendor to the commitments made in writing in the Vendor's proposal. The security will be forfeited in the event the awarded Vendor, at any time during the contract negotiation process, refuses to honor commitments made in its proposal, reneges on pricing, takes exception to any term or condition that was not addressed in the Vendor's written proposal, or fails to execute a contract as anticipated in the RFP and the Vendor's proposal, including documented exceptions, within fifteen (15) working days after the Vendor's initial receipt of the project contract from **ITS**, unless an extension is agreed to by **ITS.**

As stated in the RFP, the Vendor may take exception to any point without incurring any liability to provide items to which an exception has been taken. Likewise, the State has no obligation to accept any proposed exception. Should the State decide, at its sole discretion and at any point in the process, that an exception is NOT acceptable, **ITS** will reject the Vendor's proposal and return the Vendor's security.

The Vendor's security will be returned promptly after **ITS** and the successful Vendor have executed a contract or within ninety (90) days after opening the proposals if no letter of intent to award a contract has been sent. In the event that the successful Vendor

fails to accept and sign the mutually negotiated contract, that Vendor shall be disqualified and **ITS** shall initiate negotiations with the next ranked Vendor until a contract is successfully negotiated, or **ITS** elects to cancel the procurement. The securities of all remaining Vendors will be returned when a contract has been successfully negotiated and executed, or when the procurement is canceled.

37. **Performance Bond/Irrevocable Bank Letter of Credit**

The Vendor must include the price of a performance bond or irrevocable bank letter of credit with his RFP proposal. If required, the cost of the bond or letter of credit must be shown as a separate line item in the *Cost Information Submission*. The performance bond or letter of credit must be procured at the Vendor's expense prior to the execution of the contract and may be invoiced to Mississippi Department of Education after contract initiation only if itemized in the *Cost Information Submission* and in the executed contract. **The final decision as to the requirement for a Performance Bond or Irrevocable Bank Letter of Credit will be made upon contract award and is at the State's sole discretion.**

If a Performance Bond /Irrevocable Bank Letter of Credit is required, the Vendor must procure and submit to **ITS**, on behalf of Mississippi Department of Education, with the executed contract, (a) a performance bond from a reliable surety company authorized to do business in the State of Mississippi or (b) an irrevocable bank letter of credit that is acceptable to the State. The Performance Bond or the Irrevocable Letter of Credit shall be for the total amount of the contract or an amount mutually agreed upon by the State and the successful Vendor and shall be payable to Mississippi Department of Education, to be held by their contracting agent, the Mississippi Department of Information Technology Services. No contract resulting from this RFP will be valid until the required Performance Bond or Irrevocable Bank Letter of Credit has been received and found to be in proper form and amount. The Vendor agrees that the State has the right to request payment for a partial amount or the full amount of the Irrevocable Letter of Credit/Performance bond should the products/services being procured hereunder not be provided in a manner consistent with this RFP and the Vendor's proposal by the delivery dates agreed upon by the parties. The State may demand payment by contacting the bank issuing the letter of credit or the bonding company issuing the performance bond and making a written request for full or partial payment. The issuing bank/bonding company is required to honor any demand for payment from the State within fifteen (15) days of notification. The letter of credit/performance bond shall cover the entire contract period, with the exception of post-warranty maintenance and support, and shall not be released until final acceptance of all products and deliverables required herein or until the warranty period, if any, has expired, whichever occurs last. If applicable, and at the State's sole discretion, the State may, at any time during the warranty period, review Vendor's performance and performance of the products/services delivered and determine that the letter of credit/performance bond may be reduced or released prior to expiration of the full warranty period.

38. **Responsibility for Behavior of Vendor Employees/Subcontractors**

The Vendor will be responsible for the behavior of all its employees and subcontractors while on the premises of any State agency or institution. Any Vendor employee or subcontractor acting in a manner determined by the administration of any State agency or institution to be detrimental, abusive, or offensive to any of the staff or student body of any State agency or institution will be asked to leave the premises and can be suspended from further work on the premises.

39. **Protests**

The Executive Director of **ITS** and/or the Board Members of **ITS** or their designees shall have the authority to resolve Vendor protests in connection with the selection for award of a contract. Copies of the protest procedures are available on the **ITS** Internet site - **ITS** Protest Procedure and Policy, Section 019-020, **ITS** Procurement Handbook at: http://dsitspe01.its.ms.gov/its/procman.nsf/TOC4?OpenView or from **ITS** upon request.

40. **Protest Bond**

Potential Vendors may protest any of the specifications of this RFP on the belief that the specification is unlawful, unduly restrictive, or unjustifiably restraining to competition. Any such protest must be in writing and submitted to the **ITS** Executive Director along with the appropriate protest bond within five (5) working days of the Official Release of the RFP, as defined in the **ITS** Protest Procedure and Policy. The outside of the envelope must be marked "Protest" and must specify RFP number 3590.

As a condition precedent to filing any protest related to this procurement, the Vendor must procure, submit to the **ITS** Executive Director with its written protest, and maintain in effect at all times during the course of the protest or appeal thereof, a protest bond in the full amount of the total estimated project lifecycle cost or $250,000.00, whichever is less. The total estimated project lifecycle cost will be the amount used by **ITS** in the computation of cost points, as the low cost in the denominator of the cost evaluation formula. The bond shall be accompanied by a duly authenticated or certified document evidencing that the person executing the bond is a licensed Mississippi agent for the bonding company. This certified document shall identify the name and address of the person or entity holding the protest bond and shall identify a contact person to be notified in the event that the State is required to take action against the bond. The protest bond shall not be released to the protesting Vendor until the protest is finally resolved and the time for appealing said protest has expired. The protest bond shall be procured at the protesting Vendor's expense and be payable to the Mississippi Department of Information Technology Services. Prior to approval of the protest bond, **ITS** reserves the right to review the protest bond and require the protesting Vendor to substitute an acceptable bond in such form as the State may reasonably require. The premiums on such bond shall be paid by the protesting Vendor. The State may claim against the protest bond as specified in Section 25-53-5 (n) of the Mississippi Code of 1972, as amended during the 1998 Mississippi legislative session, in addition to all other rights and remedies the State may have at law or in equity.

Should the written protest submitted by the Vendor fail to comply with the content requirements of **ITS'** protest procedure and policy, fail to be submitted within the prescribed time limits, or fail to have the appropriate protest bond accompany it, the protest will be summarily dismissed by the **ITS** Executive Director.

41. **Mississippi Employment Protection Act**

Effective July 1, 2008, Vendor acknowledges that if awarded, it will ensure its compliance with the Mississippi Employment Protection Act, Section 71-11-1, et seq. of the Mississippi Code Annotated (Supp2008), and will register and participate in the status verification system for all newly hired employees. The term "employee" as used herein means any person that is hired to perform work within the State of Mississippi. As used herein, "status verification system" means the Illegal Immigration Reform and Immigration Responsibility Act of 1996 that is operated by the United States Department of Homeland Security, also known as the E-Verify Program, or any other successor electronic verification system replacing the E-Verify Program. Vendor will agree to maintain records of such compliance and, upon request of the State, to provide a copy of each such verification to the State.

Vendor acknowledges and certifies that any person assigned to perform services hereunder meets the employment eligibility requirements of all immigration laws of the State of Mississippi.

Vendor acknowledges that violating the E-Verify Program (or successor thereto) requirements subjects Vendor to the following: (a) cancellation of any state or public contract and ineligibility for any state or public contract for up to three (3) years, with notice of such cancellation being made public, or (b) the loss of any license, permit, certification or other document granted to Vendor by an agency, department or governmental entity for the right to do business in Mississippi for up to one (1) year, or (c) both. Vendor would also be liable for any additional costs incurred by the State due to contract cancellation or loss of license or permit.

SECTION V
PROPOSAL EXCEPTIONS

Please return the *Proposal Exception Summary Form* at the end of this section with all exceptions to items in any Section of this RFP listed and clearly explained or state "No Exceptions Taken." If no *Proposal Exception Summary Form* is included, the Vendor is indicating that he takes no exceptions to any item in this RFP document.

1. Unless specifically disallowed on any specification herein, the Vendor may take exception to any point within this RFP, including a specification denoted with "shall" or "must," as long as the following are true:

   1.1 The specification is not a matter of State law;

   1.2 The proposal still meets the intent of the RFP;

   1.3 A *Proposal Exception Summary Form* is included with Vendor's proposal; and

   1.4 The exception is clearly explained, along with any alternative or substitution the Vendor proposes to address the intent of the specification, on the Proposal *Exception Summary Form*.

2. The Vendor has no liability to provide items to which an exception has been taken. **ITS** has no obligation to accept any exception. During the proposal evaluation and/or contract negotiation process, the Vendor and **ITS** will discuss each exception and take one of the following actions:

   2.1 The Vendor will withdraw the exception and meet the specification in the manner prescribed;

   2.2 **ITS** will determine that the exception neither poses significant risk to the project nor undermines the intent of the RFP and will accept the exception;

   2.3 **ITS** and the Vendor will agree on compromise language dealing with the exception and will insert same into the contract; or

   2.4 None of the above actions is possible, and **ITS** either disqualifies the Vendor's proposal or withdraws the award and proceeds to the next ranked Vendor.

3. Should **ITS** and the Vendor reach a successful agreement, **ITS** will sign adjacent to each exception which is being accepted or submit a formal written response to the *Proposal Exception Summary* responding to each of the Vendor's exceptions. The *Proposal*

Exception Summary, with those exceptions approved by **ITS**, will become a part of any contract on acquisitions made under this RFP.

4. An exception will be accepted or rejected at the sole discretion of the State.

5. The State desires to award this RFP to a Vendor or Vendors with whom there is a high probability of establishing a mutually agreeable contract, substantially within the standard terms and conditions of the State's RFP, including the *Standard Contract* in Attachment A, if included herein. As such, Vendors whose proposals, in the sole opinion of the State, reflect a substantial number of material exceptions to this RFP, may place themselves at a comparative disadvantage in the evaluation process or risk disqualification of their proposals.

6. For Vendors who have successfully negotiated a contract with **ITS** in the past, **ITS** requests that, prior to taking any exceptions to this RFP, the individual(s) preparing this proposal first confer with other individuals who have previously submitted proposals to **ITS** or participated in contract negotiations with **ITS** on behalf of their company, to ensure the Vendor is consistent in the items to which it takes exception.

PROPOSAL EXCEPTION SUMMARY FORM

List and clearly explain any exceptions, for all RFP Sections and Attachments, in the table below.

ITS RFP Reference	Vendor Proposal Reference	Brief Explanation of Exception	**ITS** Acceptance (sign here only if accepted)
(Reference specific outline point to which exception is taken)	(Page, section, items in Vendor's proposal where exception is explained)	(Short description of exception being made)	
1.			
2.			
3.			
4.			
5.			
6.			
7.			

SECTION VI
RFP QUESTIONNAIRE

Please answer each question or provide the information as requested in this section.

1. **Statewide Automated Accounting System (SAAS) Information for State of Mississippi Vendor File**

1.1 **SAAS Vendor Code**: Any Vendor who has not previously done business with the State and has not been assigned a SAAS Vendor code should furnish a signed copy of an IRS W-9 form with the proposal. A copy of the W-9 Form can be obtained by going to the **ITS** website, http://www.its.ms.gov, clicking on the "Procurement" button to the left of the screen, selecting "Vendor Information", scrolling to the bottom of the page, and clicking on the link "Forms Required in RFP Responses." Vendors who have previously done business with the State should furnish **ITS** with their SAAS Vendor code.

SAAS Vendor Code: _____ OR Signed W-9 Form Attached: _____

1.2 **Vendor Self-Certification Form:** The State of Mississippi, in an effort to capture participation by minority Vendors, asks that each Vendor review the State of Mississippi Minority Vendor Self Certification Form. This information is for tracking/reporting purposes only, and will not be used in determining which Vendor will be chosen for the project. Any Vendor who can claim status as a Minority Business Enterprise or a Woman Business Enterprise in accordance with the definitions on this form and who has not previously submitted a form to the State of Mississippi should submit the completed form with the proposal. A copy of the Minority Vendor Self-Certification Form can be obtained at: http://www.mississippi.org/assets/docs/minority/minority_vendor_selfcertform.pdf. Please direct any questions about minority certification in Mississippi to the Minority Business Enterprise Division of the Mississippi Development Authority by telephone at (601) 359-3448 or via email at minority@mississippi.org.

Minority Vendor Self-Certification Form Included: _____
Minority Vendor Self-Certification Form Previously Submitted: _____
Not claiming Minority or Women Business Enterprise Status: _____

2. **Certification of Authority to Sell**

The Vendor must certify Vendor is a seller in good standing, authorized to sell and able to deliver all items and related services proposed in the State of Mississippi in the time frame specified. Does the Vendor make these certifications? (A yes or no answer is required.)

3. **Certification of No Conflict of Interest**

Mississippi law clearly forbids a direct or indirect conflict of interest of a company or its employees in selling to the State. The Vendor must answer and/or provide the following:

3.1 Does there exist any possible conflict of interest in the sale of items to any institution within **ITS** jurisdiction or to any governing authority? (A yes or no answer is required.)

3.2 If the possibility of a conflict does exist, provide a list of those institutions and the nature of the conflict on a separate page and include it in your proposal. The Vendor may be precluded from selling to those institutions where a conflict of interest may exist.

4. **Pending Legal Actions**

4.1 Are there any lawsuits or other legal proceedings against the Vendor that pertain to any of the software, hardware, or other materials and/or services which are a part of the Vendor's proposal? (A yes or no answer is required.)

4.2 If so, provide a copy of same and state with specificity the current status of the proceedings.

5. **Non-Disclosure of Social Security Numbers**

Does the Vendor acknowledge that any information system proposed, developed, or modified under this RFP that disseminates, in any form or manner, information or material that contains the Social Security Number of an individual, has mechanisms in place to prevent the inadvertent disclosure of the individual's Social Security Number to members of the general public or to persons other than those persons who, in the performance of their duties and responsibilities, have a lawful and legitimate need to know the individual's Social Security Number? This acknowledgement is required by Section 25-1-111 of the Mississippi Code Annotated.

6. **Order and Remit Address**

The Vendor must specify both an order and a remit address:

Order Address:

Remit Address (if different):

7. **Web Amendments**

As stated in Section III, **ITS** will use the **ITS** website to post amendments regarding RFPs before the proposal opening at http://www.its.ms.gov/rfps/rfps_awaiting.shtml. We will post clarifications until noon seven days prior to the proposal opening date listed on the cover page of this RFP or the posted extension date, if applicable.

Vendors may list any questions or items needing clarification discovered in the week prior to the proposal opening in a written format at the beginning of the proposal binder or in the comment section for the individual offering.

Does the Vendor certify that they have reviewed a copy of the **ITS** amendments for RFPs as above stated? (A yes or no answer is required.)

SECTION VII
TECHNICAL SPECIFICATIONS

1. How to Respond to this Section

1.1 Beginning with Item 3 of this section, label and respond to each outline point in this section as it is labeled in the RFP.

1.2 The Vendor must respond with "ACKNOWLEDGED," "WILL COMPLY" or "AGREED" to each point in this section. In addition, many items in this RFP require detailed and specific responses to provide the requested information. Failure to provide the information requested will result in the Vendor receiving a lower score for that item, or, at the State's sole discretion, being subject to disqualification.

1.3 "ACKNOWLEDGED" should be used when no vendor response or vendor compliance is required. "ACKNOWLEDGED" simply means the vendor is confirming to the State that he read the statement. This is commonly used in the RFP sections where the agency's current operating environment is described or where general information is being given about the project.

1.4 "WILL COMPLY" or "AGREED" are used interchangeably to indicate that the vendor will adhere to the requirement. These terms are used to respond to statements that specify that a vendor or vendor's proposed solution must comply with a specific item or must perform a certain task.

1.5 If the Vendor cannot respond with "ACKNOWLEDGED," "WILL COMPLY," or "AGREED," then the Vendor must respond with "EXCEPTION." (See Section V, for additional instructions regarding Vendor exceptions.)

1.6 Where an outline point asks a question or requests information, the Vendor must respond with the <u>specific</u> answer or information requested.

1.7 In addition to the above, Vendor must provide explicit details as to the manner and degree to which the proposal meets or exceeds each specification.

2. General Overview

The Mississippi Department of Education (MDE) is seeking to enter into a contract with a qualified Vendor to provide a Statewide Student Information System. MDE currently maintains and facilitates a custom built statewide student level database system referred to as the Mississippi Student Information System (MSIS).

MSIS was created to comply with the Performance-Based Accreditation Model

established by the Education Reform Act of 1982. This creation was strengthened by further legislation in 1994. This legislation placed an emphasis on the accurate reporting of student attendance and personnel at the school level. MSIS was created to capture the data necessary to comply with this state legislation, as well as federal requirements, for reporting.

With the increased reporting requirements that have been established by state and federal initiatives and the need for readily available quality data to make improvements to Mississippi students' learning experience, MDE must improve its data collection and reporting process. There have been no major software enhancements made to MSIS since 2001/2002 with the exception of the Special Education Module.

MSIS provides for the electronic collection and storage of comprehensive detailed data about teachers, administrators, students, and school board members. MSIS also allows for the electronic transfer of student records from one school district to another, thus offering a unique student tracking system. This data is collected on a daily and monthly basis from school districts.

Each school district currently uses one of several available school administration packages to capture this data. To minimize the risk and inconsistencies that can occur based on various method of reporting, MDE wants to acquire a single school administration package that can be used by the district, and at the state level.

The objectives for implementing the Statewide School Information System are as follows:

- Provide a single School Administration Package (SAP), converting school districts' data from existing systems into the new application (Phase I);
- Replace the existing MSIS with a state-level version of the single School Administration Package implemented for the districts (Phase II);
- Fully convert and migrate existing files and external files from several main MDE applications;
- Provide a solution based on the School Information Framework Association (SIFA) to automate the process of collecting the district data in real time; and
- Fully implement a data warehouse, providing a Business Intelligence tools using a data portal (Phase III).

The Vendor must be able to implement this solution in a logical phase approach that will provide the least amount of interruption for the districts and MDE.

Business Drivers/Agency Priority:

- Support the MDE performance-based accreditation model;

- Provide timely and accurate reporting of education data (schedules, attendance, grades, transportation, discipline, Vocational, and Special Education) to meet state and federal requirements; and
- Allow for student tracking across the state to determine student mobility trends and to assist in the reduction of the drop-out rate within the state

3. Procurement Project Schedule

Task	**Date**
First Advertisement Date for RFP	09/29/09
Second Advertisement Date for RFP	10/06/09
Vendor Conference	10:00 a.m. Central Time on 10/12/09
Deadline for Vendor's Written Questions	3:00 p.m. Central Time on 10/23/09
Deadline for Questions Answered and Posted to ITS Web Site	11/06/09
Intent to Propose	11/10/09
Open Proposals	3:00 p.m. Central Time on 11/24/09
Evaluation of Proposals Begins	11/24/09
ITS Board Presentation	01/28/10
Contract Negotiation	01/28/10
Proposed Project Implementation Start-up	03/01/10

4. Mandatory Provisions

4.1 Vendors planning to submit a response to this RFP must attend a Vendor Conference on Monday, October 12, 2009, at 10:00 A.M. Central Time at the Mississippi Department of Education, Central High School Building Auditorium, 359 North West Street, Jackson, Mississippi 39201.

4.2 Each Vendor choosing to participate as a prime contractor must be represented on-site at the conference by a bona fide and knowledgeable employee. No exceptions will be granted to this requirement. Any proposal received from a Vendor who did not have an authorized representative at the Vendor Conference will be rejected. Vendors should familiarize themselves with this RFP prior to attending the mandatory Vendor Conference and should come prepared to ask questions.

5. RFP Guidelines and Objectives/Statements of Understanding

5.1 Vendors are requested to submit an "Intent to Propose" document to ITS by the date indicated in the project schedule above indicating their intent to submit a proposal by the RFP due date and time. Please refer to the document in Attachment G, "Vendor Notification of Intent to Propose" for detail.

5.2 The Vendor must carefully detail the manner and degree by which the proposal meets or exceeds each specification. Vague or inconclusive responses will be judged as non-responses within the context of this evaluation.

5.3 MDE is looking for the best functional solution at the best price and will consider local implementation (i.e. State Data Center or MDE) options as well as ASP or Vendor hosted models. While all alternatives will be considered, preference will be given to the solution that most closely meets the defined specifications.

5.3.1 Vendor must fully discuss the approach they plan to take on this project including outlining all issues they believe are pertinent to this undertaking and defining a methodology for producing the desired results.

5.3.2 For each issue identified, the Vendor must detail key elements of the problem task and the manner in which they approach resolution.

5.4 The Vendor must understand and provide information in his response to support a deliverable-based project. The Project Work Plan and the Cost Information Summary should define and denote milestones and deliverables, both paid and unpaid, for the entirety of the project.

5.5 MDE requires a Commercial off-the-Shelf (COTS) approach to this procurement, placing strong emphasis on acquiring a field-proven, mature product with a significant client base from an experienced Vendor. Although the Vendor should be prepared to customize the proposed system to meet the requirements detailed in this RFP, MDE is not anticipating a major customization effort. The solution will be selected based on overall closeness of fit with MDE operations, requiring the least amount of system customization.

5.6 The State is seeking a solution that is intuitive in nature and that utilizes the best technical practices of the information technology industry. While a mature, field-proven product is being sought, MDE also requires a system that is not at the end of its product life cycle and that also reflects the best practices

of the technology industry. Additionally, the technology platform (database engine, operating platform, etc.) for the proposed product must not be at the end of its life cycle.

5.7 Other Vendors may be listed in these requirements when referencing service(s) provided to the State. Any mention of other Vendors in these requirements is subject to change based upon the expiration of any current agreements or the acquisition of future agreements during this RFP process.

5.8 The Vendor must provide all software components and implementation services (data conversion, installation, training, support and other services) with sufficient knowledge transfer to State personnel as necessary for turnkey implementation of the proposed solution.

5.9 While the State has attempted to define all the requirements necessary for the successful integration/implementation of a Statewide Student Administration System, the State expects the Vendor to identify and outline any areas that were overlooked or misstated. The State acknowledges that the functional specifications for the system requested in this RFP are not complete. To be more precise, these specifications reflect the known requirements necessary for MDE to have a fully functional, efficient, turnkey system. Vendor is tasked with proposing a complete system and fully describing those system features that meet these known specifications, and that address functionality not covered in this RFP.

5.10 MDE intends to be fully involved in all aspects of the project and will assign a full time project manager and a senior manager for Quality Assurance (QA)/oversight. MDE functional analysts will be fully involved as members of the project team and knowledge transfer will be a key element/requirement of this proposal.

5.11 The Vendor is expected to make all project records accessible during the duration of the project and for up to three years after the project completion date.

5.12 All findings, designs, documentation, and other deliverables produced under this contract become the exclusive property of the State for use without restriction.

5.13 The State is not required to request clarification. Therefore, all proposals must be complete and concise and reflect the most favorable terms available from the Vendor.

6. Vendor Qualifications

6.1 Organizational Experience

6.1.1 The Vendor must provide a description of his organization with sufficient information to substantiate proven experience in the products and services being proposed.

6.1.2 The Vendor must state the number of clients for whom the Vendor is currently providing similar software and software support services.

6.1.3 At least one of the Vendor's references, as outlined in Section IX of this RFP, must be a public entity (city, state, province or country) in which the Vendor has a School Administration Package, Student Information System, and a Data Warehouse. Vendor must include the name, title, telephone number and e-mail of a contact person at the public entity named. Additional consideration will be given to Vendors with more than one successful similar public entity installation. Additional consideration will also be given to Vendors with at least one successful Department of Education installation.

6.2 Organization Size and Structure

6.2.1 The Vendor must provide the location of its principal office and the number of executive and professional personnel employed at this office.

6.2.2 The Vendor must state the number of years the Vendor has been in business.

6.2.3 The Vendor must state the organization's size (e.g., employees, offices, locations) and structure (e.g., state, national, or international organization);.

6.2.4 The Vendor must indicate whether the Vendor is based locally, regionally, nationally, or internationally as well as its relationship to any parent firms, sister firms, or subsidiaries.

6.2.5 The Vendor must disclose any company restructurings, mergers, and acquisitions over the past three (3) years that have impacted any products the Vendor has included in this proposal.

6.2.6 The Vendor must provide the name and the state of incorporation, if incorporated.

6.2.7 The Vendor must provide a copy of the corporation's most recent annual report, including consolidated balance sheets and related statements of income, stockholders' or partners' equity and changes in financial position, for each of the three fiscal years preceding the end of the most recent fiscal year. The financial information listed above should be compiled, reviewed, and audited by a Certified Public Accountant.

6.3 Product Information

6.3.1 Vendor must describe the proposed solution including the name of the product line, individual module names, and version of the proposed software. Vendor must illustrate the history of the proposed software through whatever evolution has occurred over the past seven (7) years. Please detail the names that the product carried together with its licensors over time.

6.3.2 Vendor must specify whether the product was developed in-house or was acquired by merger or acquisition with another company.

6.3.3 Vendor must specify which components of the proposed product were not developed in-house and the name of the company responsible for developing those modules, if applicable.

6.3.4 Vendor must specify the number of employees on the initial development team who are still employed by the Vendor.

6.3.5 Vendor must specify the number of full time employees dedicated to the proposed product as well as each individual's role with the proposed product (training, implementation, data conversion, developer, etc).

6.3.6 Vendor must outline in detail the 5-year plan for the proposed product.

6.3.7 Vendor must provide the details of enhancements currently planned for future releases of the proposed product and the estimated target dates of availability.

6.3.8 Vendor must provide the date of proposed system's first successful installation.

6.3.9 Vendor must provide the number of releases for the proposed product.

6.3.10 Vendor must provide the full schedule of upgrades released for the product in the last three (3) years.

6.3.11 Vendor must explain the process for incorporating user suggestions for software enhancements into updates.

6.3.12 Vendor must describe the current QA/testing process for software updates before releasing to the client.

6.3.13 Vendor must describe current procedures for ensuring that adequate support staff is available during required updates.

6.3.14 Vendor must provide the number of clients currently using the proposed version of this product in a production mode. Vendor is expected to provide a client list as an indication of the product's presence in the market. Vendor must provide the number of "in progress implementation" clients for the proposed product.

6.3.15 Vendor must describe the method followed for licensing the proposed software (e.g., by workstation, concurrent number of users, site/enterprise license, pricing tiers, etc.).

6.3.16 Vendor must agree that the State shall have:

6.3.16.1 Unlimited use by licensed users of the software products acquired for Mississippi government enterprise operations;

6.3.16.2 Use of such software products with a backup platform system if it is considered necessary by the State; and

6.3.16.3 The right to copy such software for safekeeping and backup purposes.

6.3.17 The Vendor must provide information on active user groups as follows if such groups exists:

6.3.17.1 Vendor must specify the frequency of user group meetings;

6.3.17.2 Vendor must specify the total number of attendees at the last user group meeting;

6.3.17.3 Vendor must specify the user group contact information;

6.3.17.4 Vendor must specify how the user group operates; and

6.3.17.5 Vendor must specify the benefits related to joining the user group.

7. Project Staffing Requirements

7.1 The Vendor must propose appropriate quantity and quality of staff to ensure successful completion of this project (including project management, data conversion, implementation, data base administration, and training).

7.1.1 Vendor must clearly define all individuals and proposed roles for the duration of this project.

7.1.2 All individuals proposed for this project must have a minimum of one year of experience in the role proposed. Additional consideration may be given to the Vendors whose proposed staff exceeds the minimum requirements.

7.1.3 The Vendor must provide, in the proposal, an organizational chart identifying personnel proposed for the project and the chain of command inside the Vendor's organization for that designated staff.

7.2 The Vendor must provide resumes and references for each key individual to be assigned to the project. MDE reserves the right to approve all individuals assigned to this project. Resumes must reflect qualifications and recent experience relevant to the scope of the work indicated in this RFP. Resumes must include at least three (3) references that can be directly contacted to verify the individual's qualifications and experience. Resumes should list the following information for each project reference provided by individual:

7.2.1 Company name;

7.2.2 Immediate supervisor's name;

7.2.3 Immediate supervisor's title;

7.2.4 Supervisor's phone number;

7.2.5 Supervisor's fax number;

7.2.6 Supervisor's e-mail address;

7.2.7 Brief description of the project;

7.2.8 Duration of project; and

7.2.9 Individual's role in the project

7.3 Upon contract award, the Contractor must commit the key personnel named in the proposal and must specify the percentage of time each person will commit to the project. The proposed individuals should possess the necessary skills and certifications for each proposed role.

7.4 Key individuals must be available to work on the project once an award is made and a contract is signed. All Vendors' key staff members proposed must be approved by MDE prior to the start of the project. Any replacement or substitution of staff as proposed requires written approval from MDE prior to replacement or substitution.

7.5 Vendor must acknowledge and agree that all Vendor personnel as well as subcontractor personnel, if applicable, assigned to this project will exercise due care with respect to the use, preservation, and safekeeping of confidential information (i.e., confidential information related to state employees, citizens, certification scores, and schools) that in the course of the project work they observe or otherwise come in contact with and will exercise due care to prevent disclosure to unauthorized third parties and to prevent unauthorized use of the confidential information, as is the customary and accepted practice within the industry.

8. Technical Requirements - Infrastructure

8.1 General

8.1.1 The Vendor must list all available platforms on which the proposed solution can successfully function.

8.1.2 The proposed solution must allow access to all application screens using a browser without any other third party utilities, other than browser plug-ins, so that there are not client side licenses to buy or administer. Vendor must describe how the proposed solution will comply with this requirement and provide the recommended client configuration.

8.1.3 The system proposed must be configured with full and complete development, quality assurance, production, and training environments. The testing environment will be used for User Acceptance Testing (UAT) of all modules of the proposed system as well as future software updates to determine if the software can be moved to the production environment.

8.2 Hardware

8.2.1 The Vendor must provide a detailed list and description of all hardware, including servers, desktops, and communications equipment required for optimal operation of the proposed solution. Descriptions must include exact specifications and capacities for all required equipment and hardware for the successful implementation of the proposed solution with full functioning development, quality assurance, production, and training environments (including disk storage configuration, memory requirements, interface(s), tape backup, and any other system components required).

8.2.2 The proposed hardware solution must be able to support the proposed solution for three to five years.

8.2.3 Recommendation details must utilize the Vendor's standard growth estimate model and a description of the growth estimate model must be included. Vendor must specify hardware configurations that are not brand specific.

8.2.4 The Vendor must work with the State's hardware supplier(s) to ensure a successful implementation of the proposed solution.

8.3 Software

8.3.1 The Vendor must list and describe all software required for the optimal operation and successful implementation of the proposed solution including, but not limited to, operating systems, utility software, and software required for communications and security.

8.3.2 Vendor must indicate whether the proposed solution is dependent on specific software versions.

8.3.3 Vendor must list all minimum software version levels required for implementation.

8.3.4 Vendor must indicate whether the system relies on any third party software.

8.3.5 The proposed solution must have the following software compatibilities:

8.3.5.1 The proposed system must be compatible with Microsoft Windows 2000/XP.

8.3.5.2 The proposed system must be compatible with Microsoft Office 2000+.

8.3.5.3 The proposed system must be compatible with MAC OS.

8.3.5.4 The proposed system must provide the capability to import from and export to an Oracle version 10g database.

8.3.6 Vendor must provide a schedule detailing each software product, its licensing basis (by CPU, by user, or other), the number of licenses required, and the version/release of each product. As outlined in Section III.17, the State reserves the right to use existing product contracts to purchase any of the products listed by the Vendor.

8.4 Hosting Requirements

8.4.1 The State intends to leverage existing state infrastructure to the maximum extent possible. The Vendor must propose a solution for hosting the Statewide Student Information System in the State Data Center as follows:

8.4.1.1 The Vendor must formulate within the proposal the full list of all systems software (DBMS, Report Writer, Utilities, etc.) that is needed as a prerequisite in order for the State to host the application on the State's hardware.

8.4.1.2 The Vendor must make preliminary recommendations regarding any additional hardware or upgrades to existing hardware required to implement the proposed solution at the State's Data Center. Vendor must provide detailed justification of these recommendations including hardware specifications and required capacities.

8.4.1.3 The Vendor will be required to prepare a detailed recommendation for hardware and software as a deliverable to the State during the initial project phases.

8.4.1.4 The Vendor is responsible for reviewing and adhering to the State of Mississippi's Enterprise Security Policy

to ensure that their proposal complies with these policies. This policy can be accessed at the following URL:
http://www.ms.gov/pdf/security_policy.pdf

8.4.1.5 To obtain information on the technical environment available at the State Data Center and the Statewide network infrastructure, Vendors may review The State of Mississippi Technology Infrastructure and Architecture Plan at the following URL:

http://www.its.ms.gov/docs/infrastructure_architecture_plan.pdf

The technical services available through **ITS** Data Services can be found at the following URL:

http://www.its.state.ms.us/docs/ITSServicesWebBrochure.pdf

8.4.1.6 The Vendor must propose all cost associated with this solution in Section VIII, Cost Information Submission, Table 1.

8.4.2 MDE State Office Hosting – As an option, the Vendor must provide the technical requirements, including hardware and software necessary for MDE to host the system.

8.4.2.1 The proposed system must function within the existing MDE environment and State of MS TCP/IP-based MPLS network. See the diagrams in Attachment H.

8.4.2.2 The Vendor must formulate within the proposal the full list of all systems software (DBMS, Report Writer, Utilities, etc.) that is needed as a prerequisite in order for the State to host the application on the MDE's hardware.

8.4.2.3 The Vendor must make preliminary recommendations regarding any additional hardware or upgrades to existing hardware required to implement the proposed solution at the MDE. Vendor must provide detailed justification of these recommendations including hardware specifications and required capacities.

8.4.2.4 The Vendor will be required to prepare a detailed recommendation for hardware and software as a deliverable to the State during the initial project phases.

8.4.2.5 If an upgrade of the existing network/workstation infrastructure is proposed as part of the proposed system installation, the Vendor must describe in detail the benefit to MDE of such an upgrade (recommended circuit upgrades based the need for additional bandwidth will be acquired from existing contracts for network services including options for MPLS-based Frame Relay and DSL).

8.4.2.6 If an upgrade of the existing network infrastructure, is not recommended, the Vendor should specify how much system growth can be accommodated on the existing platform.

8.4.2.7 The Vendor must propose all cost associated with this option in Section VIII, Cost Information Submission, Table 2.

8.4.3 Application Service Provider (ASP) Hosting – As an option, the Vendor must provide the technical requirements, including hardware and software necessary for the Vendor to host the system. The Vendor must propose all cost associated with this option in Section VIII, Cost Information Submission, Table 3. Requirements for an ASP solution include the following:

8.4.3.1 Vendor must describe in detail how he intends to provide hosting, bandwidth, security, backup, and recovery from the Vendor's ASP site.

8.4.3.2 The State reserves the right to purchase its own hardware if it is considered to be more economically feasible. For this solution to be considered, the Vendor must propose, as an option, the cost and system configuration to host the solution with all of the equipment being located at MDE. Vendor must include this optional cost in Section VIII, Cost Information Submission.

8.4.3.3 The Vendor must furnish: (1) Minimum PC system and browser technical specifications necessary to

access the system as proposed; and (2) Recommended PC system and browser technical specifications necessary to access the system as proposed.

8.4.3.4 The Vendor must identify the maximum number of concurrent users and describe the maximum system load that the standard system will support.

8.4.3.5 The system should comply with all federal and state laws, rules and regulations including confidentiality of appropriate information and HIPAA compliance.

8.4.3.6 The Vendor must guarantee uptime of at least 99%, 24 hours a day by 7 days a week, subject to credits or refunds for uptime of less than the guaranteed availability. In the event that MDE is unable to achieve the 99% application availability for a given month, Vendor shall reimburse MDE 25% of the monthly payment-processing fee.

8.4.3.7 The Vendor must provide redundant Internet connections.

8.4.3.8 The Vendor must complete daily backups of the system and indicate how often these backups are tested each year.

8.4.3.9 The Vendor shall propose and adhere to a mutually agreed upon disaster recovery plan, all at Contractor's expense.

8.4.3.10 The Vendor shall maintain the confidentiality of all data in the repository. Should the Vendor be found in violation of this requirement, the contract will be subject to termination based on Article 13 of the standard contract attached to this RFP as Attachment A.

8.4.3.11 The Vendor must ensure that upon termination or expiration of this Agreement that transition of the site from the Contractor to the Customer or to a successor host will be accomplished at no expense to MDE, and with minimal interruption of the site's accessibility and insignificant changes in the site's appearance and functionality. Vendor must fully describe this process.

8.4.3.12 The Vendor must provide Customer access to all of the technical information concerning operation of the site, including but not limited to, server specifications, Internet connection information, personnel requirements, ongoing support required and software implementations.

8.4.3.13 The Vendor must ensure that the system's performance is not degraded when the system is fully populated.

8.4.3.14 The Vendor must provide the system's expected response time to a command when the system is fully populated.

8.4.3.15 The Vendor must state whether the system has the ability to archive and retrieve information and describe how this process is handled.

8.4.4 The Vendor must identify the desired hosting solution and the two options as one of the following: Recommended Hosting Solution; First Alternate Hosting Solution; or Second Alternate Hosting Solution. Vendor must provide detail to substantiate the recommendations.

9. Technical Requirements – Systems

For each Requirement/Item Number, Vendor must respond with the appropriate letter in the "Response" column of the following table:

Response	Description
X	Exceeds Specifications
B	Exists in the Base System (i.e., in version of the software being proposed)
M	Minor Customization (i.e., a modification that would require less than 40 hours to implement)
C	Custom Enhancement (i.e., an enhancement that would require in excess of 40 hours to implement)
A	Alternate Solution
N	Not Supported (i.e., the proposed solution does not support this requirement and a customization, enhancement or alternate solution is not proposed)

Additionally, Vendor must detail, in the Required Explanation, the manner in which the proposed solution addresses each requirement according to the following:

- If "X" is specified, Vendor must explain the additional benefits of the product for the specification;
- If "M" is specified, Vendor must indicate whether the Vendor has ever implemented this modification before. Vendor must indicate what additional costs, if any, will be incurred as well as the estimated time frame for completion of this Minor Customization;
- If "C" is specified, Vendor must indicate whether the Vendor has ever implemented this modification before. Vendor must indicate what additional costs, if any, will be incurred as well as the estimated time frame for completion of this Custom Enhancement; and

- If "A" is indicated, Vendor must indicate how the alternate solution will meet the needs of MDE and whether the Vendor has used this alternate solution in the past.

Technical Systems Requirements

Item Number	Requirement	Vendor Response	Required Explanation
	General Requirements		
General Requirements apply to the entire proposed solution, including all modules, interfaces, and associated business rules.			
9.1	The proposed solution must be off-the-shelf software; generally available; not in beta or test; and currently in production and in use by customer clients as proposed. All modules of the application(s) must be in current mainstream production and immediately available.		
9.2	The proposed solution should be as close to COTS as possible with minimum customization required to meet the requirements of this RFP. The State understands and anticipates business process re-engineering for this to be accomplished.		
9.3	The proposed solution must include a well-designed graphical user interface where ALL application screens are accessible via the web browser.		
9.4	Browser Requirements		
9.4.1	Application must be browser independent.		
9.4.2	At a minimum, the proposed solution must run with all modules functioning as designed on Internet Explorer (IE) version 6.0 or greater and on Netscape version 4.0 or greater.		

Item Number	Requirement	Vendor Response	Required Explanation
9.4.3	Vendor must list other browsers supported by the proposed solution and/or list any browser limitations.		
9.5	The proposed solution must be compatible with the existing traditional TCP/IP LAN infrastructure.		
9.6	The system must have one common physical centralized relational database. The database will be shared by the public as well as all School Districts.		
9.6.1	The proposed application must be able to house, at a minimum, the current data entities currently captured in MSIS.		
9.6.2	Vendor must work with the State project team to define all data entities needed for a successful implementation of the proposed system.		
9.7	Database capacity and security must allow text fields such as comments, description, etc. to be captured, stored, and additional comments added.		
9.8	Specific text fields, such as comments, should be protected from update after the field is saved to allow for the accumulation of data history (e.g., comment history). Saved comments should not be updateable. The application should allow for additional comments to be added.		
9.9	The proposed solution should enforce referential integrity at the system level to ensure the quality of all current and historical records.		
9.10	The data must be updated in real-time.		

Item Number	Requirement	Vendor Response	Required Explanation
9.11	The application should consist of tightly integrated modules minimizing database maintenance and eliminating the need for core data to be entered more than once.		
9.12	The application must allow authorized users to modify data fields within a record without having to delete the existing record and add a new record.		
9.13	The application must allow, based upon the security rights of the user, all data related to a queried item to display.		
9.14	The application should provide a linking mechanism to access other information relevant to the queried item and the data displayed.		
9.15	The proposed solution must operate in a multi-user environment.		
9.16	The proposed solution must be able to handle multiple simultaneous users without system degradation.		
9.17	If a user attempts to open a record that is already in use by another user, the proposed solution shall provide an error message to the second user indicating the record is already in use and it is being opened in "view only" mode and cannot be modified at that time. The message should also include the ID of the user that has that record locked for update.		
9.18	The user interface of the proposed solution must minimize "menu hopping" when moving between different modules or applications.		
9.19	Response Time		
9.19.1	The proposed solution shall allow internal and external users to access the system data/information with minimal response time.		

Item Number	Requirement	Vendor Response	Required Explanation
9.19.2	Application must be structured so as to minimize the time for the initial screen to appear and navigation from window to window (i.e. screen to screen) and/or site to site.		
9.19.3	Application shall provide no discernable typing delay.		
9.19.4	Transaction completion time (after the enter key is pressed) should be near instantaneous but must not exceed 3 seconds.		
9.19.5	Application must be easy to navigate via a mouse or limited keystrokes/keystroke reduction feature to obtain information.		
9.19.6	Vendor must specify guaranteed response times based on the proposed solution, hardware specifications, and the projected size of the Mississippi database.		
9.20	Customization		
9.20.1	Application must be customizable. This should include any initial customization, to be completed by the Vendor prior to implementation, as well as additional customization of the software to be made by the System Administrator(s) post implementation.		
9.20.2	Customization methodology should provide the ability for any customized field to be included in reports.		
9.20.3	The proposed solution must allow for user-definable/new fields to be added throughout the application without Vendor customizations.		
9.20.3.1	The user-defined fields must integrate with all other processes.		
9.20.3.2	The field types must support text boxes, drop-down list boxes, radio buttons, etc.		

Item Number	Requirement	Vendor Response	Required Explanation
9.20.3.3	The proposed solution must have the flexibility to define selection criteria for drop-down lists for user-defined fields.		
9.20.3.4	All user-definable fields must have the ability to be searched and to be included in reports.		
9.20.3.5	The proposed solution must provide access functionality for all user-defined fields (i.e., access for user-defined fields would be assigned the same as access to fields already present in the application).		
9.20.4	The proposed solution must allow for user-definable screens to be added throughout the application without Vendor customizations. The user-defined screen must integrate with all other processes.		
9.20.5	The application must provide for the ability to define business rules as follows:		
9.20.5.1	Application should allow business rules to be defined that would apply system-wide, to identified user-group(s), and/or to an individual user.		
9.20.5.2	Only authorized users should have the ability to define or modify business rules.		
9.20.5.3	Authorized users must have the ability to define new business rules after the initial implementation.		
9.20.6	The application must provide for the ability to define "triggers" or action(s) that are programmatically initiated based upon pre-defined criteria and/or business rules as follows:		
9.20.6.1	Application should allow "triggers" to be defined that would apply system-wide, to identified user-group(s), and/or to an individual user.		

Item Number	Requirement	Vendor Response	Required Explanation
9.20.6.2	Only authorized users should have the ability to define or modify "triggers".		
9.20.6.3	Authorized users must have the ability to define new "triggers" after the initial implementation.		
9.20.7	The proposed solution must provide automated workflow functionality allowing the State to define one or more workflow scenarios.		
9.20.7.1	The proposed solution must provide the ability to have multiple workflows based on business rules or scenarios.		
9.20.7.2	The proposed solution must provide the ability to modify existing workflows and/or create new workflows after implementation. The State Systems Administrator or a designee possessing the appropriate security rights will perform this modification.		
9.20.7.3	The proposed solution must allow a user, with the appropriate security rights, the ability to override a pre-defined workflow on an ad-hoc basis. The purpose of this override would not be a permanent change to the workflow, only an adjustment for specific scenarios.		
9.20.7.4	Workflow functionality in the proposed solution must allow for a two-way workflow meaning that the workflow can be defined and/or overridden to allow the flow to go "backward" or "forward."		

Item Number	Requirement	Vendor Response	Required Explanation
9.21	Business rules change periodically as rules, regulations, or guidelines are changed by the Federal Department of Education, the Mississippi Board of Education, and/or the Mississippi Department of Education. The proposed application must provide for flexible configuration and the creation/alteration of business rules to allow for such changes in rules, regulations or guidelines without requiring Vendor involvement.		
9.22	The application should provide import/export functionality as follows:		
9.22.1	The application must provide for the ability to create single and/or multiple records by importing information needed to create these records from a comma delimited file or Excel spreadsheet. The file and/or spreadsheet would contain information necessary to populate the records.		
9.22.2	The application must provide the ability to export information to a comma-delimited file or Excel spreadsheet.		
9.23	The application should provide functionality that allows for fields in the record to be pre-populated using information already housed in the database and/or selected based on business rules.		
9.24	Based on a trigger, event, or status change the proposed solution should provide the following functionality:		
9.24.1	The ability to initiate automatic notification of internal personnel, schools, and/or school districts based upon a change in status code or other pre-defined criteria and/or business rules;		

Item Number	Requirement	Vendor Response	Required Explanation
9.24.2	The ability to define specific criteria and/or business rules that would cause an automatic notification to be sent to various points (individuals defined) within the workflow defined for this application;		
9.24.3	The ability to identify specific status changes where automatic notification would be initiated; and		
9.24.4	The ability to pre-define the text of all automatic notifications.		
9.24.5	The ability to include some type of link to a location within the application that allows the users to check various data statuses.		
9.24.6	The ability for automatic notification to be sent, at a minimum, via e-mail and fax. Vendor should identify all methods of notification for which functionality is provided in the proposed solution.		
9.24.7	The ability to identify which users should receive notifications (e.g., e-mail, fax, mail, etc.) and their preferred notification method.		
9.25	The proposed solution must provide "user-friendly" messages to the user by providing error messages worded in a non-technical manner. Messages should also contain any information of a technical nature necessary for the error to be identified, debugged, and corrected by the technical support team.		
9.26	Application must provide the following functionality related to security and/or accessibility:		
9.26.1	Security must be an integral part of the proposed solution. The solution must enforce referential integrity and constraints directly within the database and application tables.		

Item Number	Requirement	Vendor Response	Required Explanation
9.26.2	Application security level will determine the level of access each individual has and what that individual will be allowed to view and perform on each screen or field of the application.		
9.26.3	Application must provide functionality that supports multi-level security definition/ role-based security levels.		
9.26.4	Application must provide functionality that supports multi-level security access.		
9.26.5	The proposed solution must prevent unauthorized access to the system and must allow the State to determine which modules users may access.		
9.26.6	The system must provide application and menu level security and allow setup of inquiry, add, update, and delete access by user and/or group.		
9.26.7	The proposed solution must allow the System Administrator to set rights for access, modification, addition, and deletion of fields by individual or group.		
9.26.8	The system must provide functionality that supports the assignment of security levels globally, by group and individual user.		
9.26.9	Vendor must provide the password rules and standards provided in the proposed solution. At a minimum, Vendor must describe how many and what type characters are required for the creation of a valid password, password aging, and password lockout.		
9.26.10	The application security should not allow a user ID to be logged into the application more than once at any given point in time.		

Item Number	Requirement	Vendor Response	Required Explanation
9.26.11	The system must allow external users to create their own user ID and Password as well as functionality for the user to manage their password.		
9.26.12	The ability to define functions within the application where there would be a date/time stamp applied including the user ID to create an audit history for all defined activities.		
9.27	Application must provide the following functionality related to information technology auditing:		
9.27.1	The proposed solution must provide audit reports for user and administrator activity.		
9.27.2	The proposed solution must provide an audit trail across all functions by associating a user ID and date/time stamp to all adds, changes, and deletes throughout the solution.		
9.27.3	The audit facility must track all database changes, regardless if enacted via the application, a database utility, or other means.		
9.27.4	The proposed solution must support history logs meaning that any change to the database must be logged and identified with a date/time stamp including user ID. A history of all changes must be accessible to the Systems Administrator.		
9.28	The proposed solution must incorporate data integrity by incorporating the transaction principles described in the following paragraphs:		

Item Number	Requirement	Vendor Response	Required Explanation
9.28.1	A transaction is a series of operations performed as a single unit of work. Binding a set of related operations together in a transaction ensures the consistency and reliability of the system despite any errors that occur. All operations in a transaction must complete successfully in order to make the transaction successful. The transaction is started with a BEGIN TRANSACTION and is terminated with either a COMMIT TRANSACTION or a ROLLBACK TRANSACTION.		
9.28.2	Two-phase commit is a feature of transaction processing systems that enables databases to be returned to the pre-transaction state if some error condition occurs. A single transaction can update many different databases. The two-phase commit strategy is designed to ensure that either all the databases are updated or none are updated, so that the databases remain synchronized.		
9.29	The Vendor must describe the functionality provided in the proposed solution, at a minimum, for: archiving data by a specified time period; selective archiving; types of data to be archived; scheduling automatic archiving; and for recovery of archived data.		
9.30	The system should contain a job-processing window to monitor jobs currently running in the system. This window should allow the State to modify and/or delete scheduled jobs.		
9.31	The proposed application should include a comprehensive on-line help function that includes all screens, modules and functional areas of the solution.		

Item Number	Requirement	Vendor Response	Required Explanation
9.32	The proposed solution must provide print capabilities to include, but not be limited to, the generation of hard copy licenses and associated correspondence.		
9.33	The proposed solution must have the capability to spell-check any text comment field. The user must have the ability to apply or ignore the suggested changes.		
9.34	Reporting Requirements - Any general reporting requirements listed in this section shall also apply to any reporting requirements that may be listed in other sections of this RFP. When a complete list of reports is compiled, the State will assign a priority to each report and identify the reports for which the Vendor will be responsible to develop and which reports the State will develop. Requirements contained in this Reporting Requirements section are not exhaustive.		
9.34.1	The Vendor must facilitate a report identifying analysis session(s) to determine all reports needed.		
9.34.2	The proposed solution must provide the ability to automatically generate reports.		
9.34.3	The proposed solution must provide the ability to generate reports on-demand.		
9.34.4	The State should be able to add reports to a pick list on the application versus having to rely strictly on a third-party tool.		
9.34.5	The proposed solution must provide the capability for generating detail and summary reports on all data maintained in the database.		
9.34.6	The system should provide graphical reporting capabilities year to date or on a 12 month basis for all services.		

Item Number	Requirement	Vendor Response	Required Explanation
9.34.7	The proposed solution must provide the functionality to allow reports to be run in real-time or scheduled to run at a specific time via a batch scheduler. Scheduled batch reports must run in an unattended mode.		
9.34.8	The proposed solution must provide the functionality to allow for the creation of custom reports. Included in this functionality must be the ability to copy and modify an existing report or query.		
9.34.9	The proposed solution must provide the functionality to allow for the creation of ad hoc queries and reports.		
9.34.10	The proposed solution must provide a reporting mechanism that offers parameter driven queries.		
9.34.11	The proposed solution must provide the functionality to allow for ad hoc queries and reports to be saved for re-use and future execution. These saved queries and reports must be able to be saved in groupings that would be accessible only to certain user groups (e.g., a grouping of saved queries and reports are saved specifically for schools and school districts while a different grouping of saved queries and reports are saved specifically for MDE).		
9.34.12	The reporting functionality provided in the proposed application must allow for all queries or reports to be made available in electronic and Word formatted printed form.		
9.34.13	The proposed solution must provide the functionality that allows reports and queries to be exported into other formats such as Excel.		

Item Number	Requirement	Vendor Response	Required Explanation
9.34.14	The proposed solution must provide the capability to perform online user queries.		
9.34.15	The proposed solution must provide the capability of reporting on and pulling into a report any pre-defined or user defined field, or combination of fields, stored in the database.		
9.34.16	The proposed solution must provide the capacity for generating detail and summary reports on all pre-defined and user-defined data maintained in the database.		
9.34.17	The proposed solution must provide the ability to generate reports containing an overview and/or detail of any system or employee activity based on user defined parameters.		
9.34.18	The proposed solution must provide the ability to create, view, print and export reports and report information based on user groups and roles.		

10. **Functional Requirements - Functions/Modules/Procedures/Reports for the State-Level System Only**

This section of the RFP outlines the specific items that must be available, real time, at the state level in addition to the requirements outlined in the School Administration Package for local district-level use. MDE desires that the integration and movement of data will be accomplished by the implementation of SIF (State Information Framework). Vendor has the option to propose an alternate solution for moving data.

Many of these Functions/Modules/Procedures/Reports already exist in the MSIS system; and the code will be provided to the awarded Vendor to assist in the development of the proposed system. Vendor must respond to this section using the response descriptions identified in the table in Item 9 above. The Vendor may propose pre-existing modules or applications that perform these same functions. Vendor must fully describe.

Item Number	Requirement	Vendor Response	Required Explanation
10.1	The system must be able to Generate and Maintain a Statewide Unique Student ID. Currently, The state of Mississippi uses a sequential identifier. A Sequential Identifier is a general number that is generated and assigned sequentially on a first student created basis. Ex: 000050123 . This number is a nine digit number that is unique to each student and follows the student throughout its Pre K to 12 school years.		
10.2	The system must include an Accreditation procedure that checks the live employee data to find out if the employee has failed the accreditation standards. This procedure inserts into EMPLOYEE_ACCRED table for employee level data, and the ACCRED_DIST_SCH_DATA table for school and district level data.		
10.2.1	The Accreditation procedure must contains: • Accreditation Edits; • Class Overload Program; and • The Standard 33 Required Courses in the Curriculum of Each Secondary School.		
10.2.2	Data from this procedure must populate the following reports: • Rpt-1336 Accreditation Edit Live Data Report • Rpt-1338 Class Overload Live Data Report • Rpt-1340 Required Courses in the Curriculum for Secondary School Standard 33 Live Data Report.		
10.3	The proposed system must allow Reimbursement Salary secondary and post-secondary teachers to be calculated and validated as follows:		

Item Number	Requirement	Vendor Response	Required Explanation
10.3.1	Must be able to select the lowest salary figure between the Pay Scale Salary and Total Contract Salary, then multiple by both Total Vocational Percent Time (Voc FTE), and District Program Rate (normally is 50% for secondary, and 100% for post-secondary).		
10.3.2	Must validate that the final Reimbursement Salary for secondary cannot exceed 50% of the total contract salary, and the post-secondary cannot exceed the total contract salary. (The maximum Reimbursement Salary for CIP 000134 Special Population is $49,000).		
10.3.3	Must check post-secondary endorsement from vocational program, zip code daily, and use secondary pay scale for secondary and post-secondary special pops for reimbursement calculation.		
10.3.4	For state-funded post-secondary teachers, the system must**;** • Check for proper endorsement in the area they are teaching; • Reimburse on the highest "endorsed" un-expired class certification; and • Cap the maximum certification for state-funded secondary and post-secondary to "AAA".		
10.3.5	The system must allow VocEd years of experience to be used from employees table.		
10.3.6	There must also be a procedure to update years of experience file for all VocEd employees each year.		
10.4	**The system must have a Mississippi Adequate Education Program (MAEP)** function that will determine whether the courses of an employee meet all the MP eligibility check. It should return the following values: -- 1 - if the teacher passes all the MP course checks -- 28 - Do not have MP selectable code -- 35 - Kick if in course table to kick out record		

Item Number	Requirement	Vendor Response	Required Explanation
	-- 38 - Federal program 1,3,4, or 9 -- 39 - More than 2 periods of course 132021 -- 46 - Inappropriate ATM -- 41 - The number of 3/4 year old count greater than 0 & federal program code is not 5 -- 45 - Excessive planning periods -- 47 - Error - Physical Education		
10.5	Must have a Vocational Teacher Budget procedure that will calculate the VocEd teacher budget reimbursement salary. The system must:		
10.5.1	For secondary, get the maximum certification class, years of experience, and locate the salary figure from the voed_tb_sec_pay_scale.		
10.5.2	For post-secondary, get the endorsement certification class, years of experience, and locate the salary figure from the voed_tb_ps_pay_scale.		
10.5.3	Update the pending flag and conditions to 1l if the employee is not endorsed and does not have any pending data.		
10.5.4	Check the voc duty days for secondary, • Prorate when duty days is not 200 days using the following formula: (pay scale salary/200) * ee voc duty days = pay scale salary • For post-secondary, prorate when duty days is not 240 days using the following formula: (pay scale salary/240) * ee voc duty days = pay scale salary		
10.5.5	For both secondary and post-secondary: • Select the lowest salary between the pay scale salary and		

Item Number	Requirement	Vendor Response	Required Explanation
	total contract salary • Determine Voc Reimbursement salary using the following formula LOWEST SALARY * VOC % * DIST-PROG REIMBURSEMENT RATE = VOC REIMBURSEMENT SALARY		
10.5.6	Must have the following Special Population reimbursement rules: • Select the maximum valid Certificate Type (A, AA, AAA, AAAA) for both secondary and post-secondary employees. • Identify the pay scale salary for both secondary and post-secondary employees based on the maximum Certificate Type and years of experience from the MAEP Salary Schedule. • The maximum years of experience on the Minimum Program Salary Schedule are 35 years. • The maximum reimbursable Vocational Duty Days for Secondary is 200 days and Post-Secondary is 240 days. • Prorate the pay scale salary if the Vocational Duty Days is less than 200 days for Secondary, and less than 240 days for Post-Secondary.		
10.6	The system must have a Finance Edits function that will **i**mport XML file and load into tables. Local Districts will provide financial data to the central database by submitting a predetermined file format.		

Item Number	Requirement	Vendor Response	Required Explanation
10.7	The system must have a Student Records Transfer function that meets the following requirement:		
10.7.1	This function must allow student records to be transferred from district to district and from district to school. All student information contained on the students' cumulative folder must be included in the transfer as a record. The information should include but not be limited to student demographics, attendance, schedules, grades, program placement (Special Ed, VocEd, Gifted, Title I), discipline/violence and standardized test scores.		
10.7.2	The system must allow schools/districts to extract cumulative folder information from the school the student transferred from in order to update their school administration software package database.		
10.7.3	The system must keep track of the date district school and grade to prevent overlapping time periods.		
10.8	The proposed system must include a District Monthly Approval Process. The current Data Collection Process involves the collection of data for the past month in the rear. Each month carries a process of Data Submission Deadlines, Data Validation, and Data Approval prior to locking in the data for the month. The proposed system must have the following monthly processing capabilities:		
10.8.1	Must allow each school should have system IDs for and ownership of all of their students by the end of the reporting month.		
10.8.2	Must allow Daily Student Data (DSD) files to be sent as needed to change a student's Special Education status (Y or N) and/or report incidents.		

Item Number	Requirement	Vendor Response	Required Explanation
10.8.3	Must allow MSD files to be created and run against the pre-processor to check that student and teacher schedules match, the school has ownership of the students, etc. prior to sending MSD file to the system.		
10.8.4	Must allow personnel to be approved each day that changes are made, so the MAEP and Accreditation procedures will run at night for the approved districts.		
10.8.5	Must allow Reporting Month (MDT and MSD) files to be submitted at noon on last school day of reporting month. (If the last day of the month falls on a weekend then file submission begins at noon on the last Friday of the month).		
10.8.6	Must allow Pre-Approved Monthly Attendance Report and all Holding Area reports to run once a school has a success. Must also check the data on the reports to insure accuracy of submitted data. Should allow a .PDF files of Holding Area reports to be generated and stored for auditing purposes. It must then allow the school to be approved system if the data is correct in Holding Area. Once all the schools have been approved, then the district should be approved.		
10.8.7	Although the new proposed system will collect the data in real time, it is the desire of the state to have similar monthly Data Submission Deadline, Data Validation, and Data Approval Periods to be implemented. The deadline for a reporting month is the 10th of the following month. **The current collection timeline can be accessed at http://www.mde.k12.ms.us/msis/timeline.html**		
10.8.8	The proposed system must allow the following report to run each		

Item Number	Requirement	Vendor Response	Required Explanation
	month to assist the districts in validating their monthly data:		
10.8.8.1	**Student** Monthly Attendance Pre-Approved Report Monthly Attendance Post-Approved Report Student Roster Holding Area Report Holding Area Absences Report Student Transfer From Report Student Transfer To Report Student Release From Report Student Release To Report		
10.8.8.2	**Personnel** General Schedule Listing Detail Personnel Listing User Defined Report Employee Race/Gender Report Summer Program Detail Personnel Listing Report Teacher Schedule Matching Teacher Schedule Not Matching TU Error List Report Minimum Program TU Edit Minimum Program Selected Listing MAEP Approval Dates by MAEP submission Date Report MAEP Approval Dates by District Name Report Accreditation Edit Report Class Overload Report Required Courses Report		
10.9	The proposed system must have a Summer Activity Screen process		

Item Number	Requirement	Vendor Response	Required Explanation
	that will display all students that were in a public school during month nine but didn't return to a public school setting. This allows all districts to verify, validate, and correct the withdrawal codes for the students listed.		
10.10	The proposed Statewide Information System must have the capability to deliver updated Table information to District Level System One particular example of this is the ability to deliver Course Code Information to the local District System at any time necessary. Example of Course Code Table can be found at http://www.mde.k12.ms.us/msis/vendors.html		
10.11	The proposed system must enable districts to enter post-graduate plans for the students who are prior-year graduates/completers.		
10.12	MDE Requires all of the following reports to be migrated/converted to the new system. All code will be provided to winning Vendor to assist in the implementation. Accreditation Edit Live Data Report Accreditation Edit Report Accreditation Standard 19 Report Accreditation Standards Course Codes Report Age and Experience of Superintendents and Assistant Superintendents Report Age and Experience of Superintendents and Assistant Superintendents by Gender and Race Report Alphabetical List of Personnel by Course Name Report		

Item Number	Requirement	Vendor Response	Required Explanation
	Archive Employee by Race/Gender Assessment Tax Levy Information by District Report Assessment Tax Levy Survey Assistant Reading Instructor Report Average Daily Attendance Report Average Daily Membership Report Average Instructional Personnel Salary by Race and Gender Report Average Salary by Classroom Teachers Report Average Salary by Position Assignment Report Average Salary of Certified Instructional Personnel by Districts Report Blank General/Schedule Employee Entry Form Blank General/Schedule Special Education Employee Entry Form Board Member Detail Report Board Member Listing Report Building Information CRT Test Results Carnegie Units Report Class Overload Live Data Report Class Overload Report Classroom Teachers Report Cohort Course/Work Area Codes Report Cumulative Enrollment Yearly Report Detail Listing Detail Personnel Listing Report Discipline Incident Summary Report Disposition Types Report Dispositions by Race/Gender District Calendar Report District Event Calendar		

Item Number	Requirement	Vendor Response	Required Explanation
	District Personnel Approval Information Report District Subject Counts Report District Summary District Supplement Report District Zero Salary Report Dropouts Yearly Report EMPLOYEE LIST FOR ERate Eligible Free Lunch Full Match Report Employee by Race/Gender Endorsement Area Report Enrollment and Attendance Public Schools Report Enrollment and Attendance Ranking Report Error List for Allocation of MAEP Teacher Units FETS Balance Sheet - Post Approved FETS Balance Sheet - Pre Approved FETS Bond Indebtedness Report FETS Bonds Indebtness Entry Screen Report FETS District Combined Finance Report - Post Approved FETS District Combined Finance Report - Pre Approved FETS Expenditure Report - Post Approved FETS Expenditure Report - Pre Approved FETS Expenditure for Public Schools Report FETS Expense Codes Report FETS Finance by Function Post-Approved Report FETS Finance by Function Pre-Approved Report FETS Finance by Fund Number Report - Post Approved FETS Finance by Fund Number Report - Pre Approved FETS Fund Codes Report FETS Fund Function Report FETS Fund Object Codes Report		

Item Number	Requirement	Vendor Response	Required Explanation
	FETS General Ledger Codes Report FETS Indirect Cost Rate Application Report FETS Mandatory Accounts Report FETS Object Codes report FETS Receipts for Public Schools Report FETS Revenue Codes Report FETS Revenue Report - Post Approved FETS Revenue Report - Pre Approved FETS Special Education Maintenance of Effort Report FETS Title I Maintenance of Effort Report FETS Vocational Education Maintenance of Effort Report Final Allotment Report Free Lunch Eligibility Partial Match Report Free and Reduced Lunch Student Roster Report Fund Balance Report - Post Approved Fund Balance Report - Pre Approved General/Schedule Employee Listing Report Generate Follow-Up Enrollment General Report Generate M&S PRI District Summary Report Generate M&S PRI Instructional Programs Report Generate M&S PRI Local Administration Report Generate M&S PRI Special Populations Report Generate M&S PRI Vocational Guidance Report Generate M&S Post-Secondary PRI Tech Prep Consortia Report Generate M&S Post-Secondary PRI Work-Based Learning Report Generate M&S Short-Term Adult PRI Report Generate Post-Secondary Occupational Program Final Enrollment Generate Post-Secondary Workbase Program Final Enrollment Generate Secondary Basic Skills, Enrichment, Discovery Programs Final Enrollment Generate Secondary Consumer Homemaking & Family/Consumer		

Item Number	Requirement	Vendor Response	Required Explanation
	Science Programs Final Generate Secondary Cooperative Program Final Enrollment Report Generate Secondary Occupational Program Final Enrollment Report Gifted Students Report Graduate Counts by District High School Graduates and Other Completers Report Holding Area CARNEGIE Unit with NO CREDIT Holding Area Incidents and Dispositions Holding Area Student Entries Holding Area Student Absences Report Holding Area Student Indicators Report Holding Area Student Roster Report Holding Area Student Withdrawals Holding Area Vocational Student Indicators Report Incident Types Report Incidents by Race/Gender Initial Load Duplicate Students Reports Instructional Personnel Number and Average Salary Report Instructional Personnel by District, Race and Gender Report Instructional Personnel by Race and Gender Report Instructional Personnel by Years of Experience Report Iowa Test Results LRE Live Report LRE Report Listing of School Personnel Selected Mississippi Adequate Education Program Report MAEP Force Select by Multiple Programs Report MIS Data Conference Mississippi Adequate Education Program Approval Dates (By District Name) Report Mississippi Adequate Education Program Approval Dates (By		

Item Number	Requirement	Vendor Response	Required Explanation
	MAEP Submission Date) Report Mississippi Adequate Education Program Force Select by District Report Mississippi Adequate Education Program Salary Schedule Report Mississippi Report Card Accreditation Level by School Mississippi Report Card Student Teacher Information by District Mississippi Report Card Vocational Education Information by District Monthly Attendance Report -- Post Approved Monthly Attendance Report -- Pre Approved Monthly Student Roster National Board Personnel Net Membership Race/Gender Report Net Membership by District Report Net Membership by School Report No Lunch Status Entered Number and Average Salaries of Instructional Personnel by Certification Report Number and Average Salary of Classroom Teachers by Training Number and Percentage of Promotions and Non-Promotions Report Number and Percentage of Promotions and Non-Promotions by Grades Report Number and Percentage of Promotions and Non-promotions by Grade per School Report Number of Minimum Program Unit Teachers by Years of Experience Report Number of Minimum Program Unit Teachers by Years of Experience Report Number of School Board Members by Type of School District Report Number of School Districts by Type of Organized Unit Report		

Item Number	Requirement	Vendor Response	Required Explanation
	Number of Students Approved for Free and Reduced Lunch Report Numerical List of Personnel by Course Code Report PA CARNEGIE Unit with NO CREDIT Paraprofessionals Personnel Snap Shot Detail Personnel Listing Report Personnel Snap Shot Error List for Allocation of MAEP Teacher Units Personnel Snap Shot Listing of School Personnel Selected Mississippi Adequate Education Program Report Personnel Snap Shot Teacher Units Edit Report Placement Difference Post Cutoff Placement Difference Pre Cutoff Placement Worksheet Post Cut-Off Missing Placement Post-Secondary Teacher Schedule Report Pre Cut-Off Missing Placement Print Blank Assessment/Tax Levy Survey Promotions and Non-promotions Detail Listing Public School Districts Report Public School Districts by Size (Enrollment) Report Public School Traditional Graduates by Race and Gender Report Public Schools by Size (Enrollment) Report Race Gender Breakdown of Dropouts Yearly Report Race Gender Breakdown of Dropouts by Grades Yearly Report Reasons for Dropouts Yearly Report Required Courses in the Curriculum for Secondary School Standard 32 Live Data Report Required Courses in the Curriculum for Secondary School Standard 32 Report Revised Allotment Report Roll Employee Status		

Item Number	Requirement	Vendor Response	Required Explanation
	SCD SPED Educational Placement Codes Report SPED Teacher Units Methodology To Support Programs For Students With Disability Salaries of Administrative Personnel Report Salary of Superintendents Report School Calendar Report Served by Resident District Source of Revenue by District (Local-State-Federal) Report Special Ed Student Roster by Teacher Report - Current Live Data Special Ed Student Table 1 Ages 3-5 Report Special Ed Student Table 1 Ages 6-21 Report Special Ed Student Table 1 Race 3-5 Report Special Ed Student Table 1 Race 6-21 Report Special Ed Student Table 2 Disabilities Ages 3-21 Report Special Ed Student Table 2 Disabilities Ages 3-5 Report Special Ed Student Table 2 Disabilities Ages 6-21 Report Special Ed Student Table 3 Correctional Facilities Report Special Ed Student Table 3 Disabilities Ages 3-5 Report Special Ed Student Table 3 Disabilities Ages 6-21 Report Special Ed Student Table 3 Educational Placement Ages 3-5 Report Special Ed Student Table 3 Educational Placement Race 3-5 Report Special Ed Student Table 3 Educational Placement Race 6-21 Rep. Special Ed Student Table 3 Private Schools Ages 3-21 Report Special Ed Student Table 4 Exiting Disabilities by Age 14-21 Rep. Special Ed Student Table 4 Exiting Disabilities by Disability Age 14-21 Report Special Ed Student Table 4 Exiting Disabilities by Race Age 14-21 Special Education Disabilities Codes Report Special Education No Certificate Employee Report Special Education Related Services Codes Report		

Item Number	Requirement	Vendor Response	Required Explanation
	Special Education Student Roster Report - Pre Cut-Off Special Education Student Roster Report By Disability - Pre Cut-Off Special Education Student Roster Report By District - Pre Cut-Off Special Education Student Roster Report By Teacher - Pre Cut-Off Special Education by Teacher Report - Post Cut-Off Sped State Roster State Subject Counts Report Student Discipline Report Student Dropouts Report Student Indicators Student Intervention Compliance Student Intervention Roster Student Match Roster Student No Match Roster Student Promotions and Non-Promotions Report Student Release From Report Student Release To Report Student Roster Student Roster Entrance Report Student Roster Ownership Report Student Transcript Report Student Transfer From Report Student Transfer To Report Student Unexcused Absences Report Subject Counts Report Summer Activity Report Summer Program Detail Personnel Listing Report Summer Program Personnel Edit Report Summer Program Report		

Item Number	Requirement	Vendor Response	Required Explanation
	Superintendent by Training - Gender and Race Report Superintendent by Training Report Table 5 by Disability Table 5 by Race Teacher Budget Report Teacher Salary Schedule Report Teacher Schedule Students Matching Report Teacher Schedule Students Not Matching Report Teacher Unit Allocation Report Teacher Units Edit Report Tentative Allotment Report Test Results Grade Level - School Test Results Grade Level - Student Test Results Subject Area - School Test Results Subject Area - Student Total MAEP Force Select Exceeds District/Instructional Time Transition Services Compliance Post-Cutoff Report Transition Services Compliance Pre-Cutoff Report Transportation Allotment Report Transportation Money for Tentative Allotments Report Transported ADA by Resident District Report Transportation Annual Report User Defined Personnel Report Vocational Slot Usage Vocational Special Population Student Roster Report Vocational Teacher Budget Edit Report Vocational Teacher Budget Reimbursement Report YTD Attendance Yearly Special Ed Match Student Yearly Special Ed No Match Student		

Item Number	Requirement	Vendor Response	Required Explanation
10.13	MDE Requires that all of the following Superintendent Annual Reports be migrated/converted to the new Statewide Information System. All code will be provided to winning Vendor to assist in the implementation: School Districts by Type of Organized Unit School Board Members Public School Districts by Size (Enrollment) Public Schools by Size (Enrollment) Number of Public Schools State Totals by Grade, Elementary Category, and Secondary Category for: Net Membership Month 01 (Enrollment), Average Daily Attendance (does not include Pre-Kindergarten – Grade 62 and Special Education Pre-Kindergarten – Grade 52) for Month 01, Cumulative Enrollment, and Average Daily Membership (does not include Pre-Kindergarten – Grade 62 and Special Education Pre-Kindergarten – Grade 52) for Month 01 State Totals of Traditional Graduates by Race and Sex State Totals of Diploma Graduates, Certificate Recipients, GED Credential Recipients, Occupational Diploma Recipients and Total Graduates/Completers State Totals Promotions and Non-promotions by Grade with percentages State Totals of Dropouts by Grade Level with percentages based on Month 01 enrollment State Totals for Public School Personnel – Certified Staff and Non-Certified Staff broken down by categories with number and average salary for each category and sub-category Age and Experience of Superintendents		

Item Number	Requirement	Vendor Response	Required Explanation
	Age and Experience of Assistant Superintendents State Totals for Number and Average Salaries According to Training for Superintendents, Instructional Personnel, and Classroom Teachers State Totals for Instructional Personnel - Number and Average Salary State Totals for Training of Instructional Personnel State Totals for Number and Average Salary of Classroom Teachers State Totals for Number of Minimum Program Unit Teachers by Years of Experience State Totals for Instructional Personnel by Years of Experience Net Membership Month 01 by District Average Daily Attendance for Months 01-09 by District Enrollment and Attendance Ranking by District based on Month 01 Average Salaries of Certified Instructional Personnel by District Classroom Teachers Report by District containing Total Classroom Teachers, Pupils in ADA Per Classroom Teacher, Average Salary Classroom Teachers, Average Salary Instructional Personnel		
10.14	The proposed system must contain Special Education Processes. See Attachment E for more detailed information.		

11. SIF Requirements

11.1 SIF Compatibility

Item Number	Requirement	Vendor Response
11.1.1	At implementation, the SAP software must include a SIF agent that is SIFA certified with the most current version at	

Item Number	Requirement	Vendor Response
	implementation date with backwards compatibility, and will keep the SIF agent up to date with the current SIF version and all required objects. Vendor must attach copies of the Vendor's certification documentation and describe the plan for releasing the new SIF versions as they become available.	
11.1.2	Vendor must list SIF certified application agents that will be provided by your company as part of this proposal that (as posted on SIF certification registry: http://certification.sifinfo.org/cert_prodlist.tpl	
11.1.3	Vendor must list SIF application agents that will be provided by the Vendor's company as part of this proposal that are SIF certified.	
11.1.4	For each SIF Certified application agent, Vendor must supply a copy of the Conformance Statement Questionnaire that were completed as part of the Vendor's certification application.	
11.1.5	SIF Experience – Vendor must provide a brief history of his company's involvement with SIF implementations. In addition, the Vendor must provide the following information:	
11.1.5.1	Vendor must describe the implementation and support services available from his company during and after deployment of the SIF certified application agents that will be provided as part of this proposal.	
11.1.5.2	Vendor must describe the functions(s) supported by the Vendor's SIF application(s) agents (i.e. subscriber, provider, etc.).	

Item Number	Requirement	Vendor Response
11.1.5.3	Vendor must list other agent vendors and/or SIF certified application agents that are known to have been deployed by schools, districts and/or states that have implemented the Vendor's SIF certified application agents that will be provided as part of this proposal. Vendor must attach the requested documentation.	
11.1.5.4	The Vendor must list the SIF data objects both published and subscribed available in the SIF certified application agents that will be provided as part of this proposal. Item 11.7 lists all of the SIF required objects. All of 11.7.1 will be minimum requirements at the time the contract is awarded. Vendor must check all other SIF objects listed in 11.7 Section Vendor 11.7.2 that will be available at the time of implementation (Refer to number 11.6). Vendor must attach documentation requested.	
11.1.5.5	Vendor must list up to three reference schools, districts, and/or states that have purchased and/or deployed your SIF certified application. Vendor must provide customer contacts for each reference.	
11.1.5.6	Vendor must state the total number of customers that have purchased and/or deployed the Vendor's SIF certified applications that will be provided as part of this proposal. **Note:** A comprehensive confidential list of clients may be requested if your organization is chosen for further consideration.	

11.2 Agent Costs

Item Number	Requirement	Vendor Response
11.2.1	Vendor must indicate whether costs for the Vendor's agent(s) are included in the software costs or if they are separate costs.	
11.2.2	Vendor must describe how upgrades agent(s) are priced.	
11.2.3	Vendor must describe the installation support and provide its cost.	
11.2.4	Vendor must describe on-going support and provide its cost.	
11.2.5	Vendor must specify whether upgrades are included in software maintenance or annual service agreement.	

11.3 Zone Integration Server

Item Number	Requirement	Vendor Response
11.3.1	Vendor must indicate whether the Vendor provides or market a Zone Integration Server (ZIS). If provided, the Vendor must list the ZIS with which the Vendor's agent works. (If a ZIS is not provided, Vendor may skip this section and go to section 11.4).	
11.3.2	Vendor must identify the version(s) of the SIF Specification that the ZIS supports.	
11.3.3	Vendor must provide a list of references from these implementations that the State may contact.	

Item Number	Requirement	Vendor Response
11.3.4	Vendor must provide the cost of the ZIS and implementation.	
11.3.5	Vendor must provide the cost for upgrades.	
11.3.6	Vendor must describe the training and support provided (documentation, phone support, etc.) and provide the cost for this training and support.	
11.3.7	Vendor must state what additional software needs to be installed and operational in order for your ZIS to run properly.	
11.3.8	Vendor must indicate whether the ZIS provides the capability to accept various versions of agents.	

11.4 SIF Association Participation

Item Number	Requirement	Vendor Response
11.4.1	Vendor must provide the original date of SIFA membership.	
11.4.2	Vendor must list leadership positions held by the Vendor's staff in your organization as part of the Schools Interoperability Framework Association, including working groups.	
11.4.3	Vendor must list SIFA working groups in which his company actively participates and staff hours of company involvement in each working group.	
11.4.4	Vendor must list any and all SIFA activities in which the Vendor has participated, including end-users meetings,	

	developers' camps, connect-a-thons, conference and trade show demonstrations, and quarterly and annual SIFA meetings.	

11.5 SIF Support

Item Number	**Requirement**	**Vendor Response**
11.5.1	Vendor must indicate whether his company will assist the school district with using SIF to interface the Vendor's ZIS application and SIF application agent with other internal and external legacy information systems used by the school district.	
11.5.2	Vendor must state what support his company provides for his ZIS application and SIF application agent. Vendor must describe his company's escalation procedures.	
11.5.3	Vendor must specify what specific training, support and development assistance will be provided.	

11.6 Updates

Item Number	**Requirement**	**Vendor Response**
11.6.1	Vendor must indicate whether his company will keep the ZIS application and SIF application agent up-to-date with the current SIF version and all required objects. New objects should be added as new versions of SIF are released and as additional modules are added to the Mississippi School Administrative Package (i.e. food service, state required test, financial and etc.). Vendor must state the time frame from date of version release until objects go live.	

Item Number	Requirement	Vendor Response
11.6.2	Vendor must indicate whether custom objects will be provided for customers, and provide the timeframe and cost.	
11.6.3	Vendor must indicate whether extended elements will be provided for customers, and provide the timeframe and cost (for example, take the element staff assignment and put it in the room info through the extended element).	

11.7 SIF Objects

Item Number	Requirement	Vendor Response	Required Explanation
11.7.1	**REQUIRED AT TIME OF CONTRACT AWARD.** Note with "Y" or "N" which of the following objects are currently available with your product and are SIF certified.		
	AttendanceCodeInfo		
	RoomInfo		
	SchoolCourseInfo		
	SchoolInfo		
	SectionInfo		
	StaffAssignment		
	StaffPersonal		
	StudentContact		
	StudentDailyAttendance		
	StudentPersonal		
	StudentPicture		

Item Number	Requirement	Vendor Response	Required Explanation
	StudentSchoolEnrollment		
	StudentSectionEnrollment		
	TermInfo		
	BusInfo		
	BusRouteDetail		
	BusRouteInfo		
	BusStopInfo		
	StudentMeal		
	StudentTransportInfo		
11.7.2	Vendor must indicate if the following SIF objects are available:		
	AccountingPeriod		
	Activity		
	ActivityProvider		
	AggregateCharacteristicInfo		
	AggregateStatisticFact		
	AggregateStatisticInfo		
	Assessment		
	AssessmentAdministration		
	AssessmentForm		
	AssessmentPackage		
	AssessmentRegistration		
	AssessmentSubTest		

Item Number	Requirement	Vendor Response	Required Explanation
	Assignment		
	AttendanceCodeInfo		
	Authentication		
	Billing		
	BusEquipment		
	BusInfo		
	BusPositionInfo		
	BusRouteDetail		
	BusRouteInfo		
	BusStopInfo		
	CalendarDate		
	CalendarSummary		
	CurriculumStructure		
	DisciplineIncident		
	EmployeeAssignment		
	EmployeeContract		
	EmployeeCredential		
	EmployeeCredit		
	EmployeePersonal		
	EmployeePicture		
	EmployeeRecertification		
	EmployeeWage		
	EmploymentRecord		
	FinancialAccount		

Item Number	Requirement	Vendor Response	Required Explanation
	FinancialAccountAccountingPeriodLocationInfo		
	FinancialAnnual		
	FinancialBudget		
	FinancialClass		
	FinancialIncomeStatement		
	FinancialTransaction		
	FiscalYear		
	FoodserviceItem		
	FoodserviceItemPortion		
	FoodserviceItemSales		
	FoodserviceItemUnit		
	FoodserviceMealPrices		
	FoodserviceMenuPlan		
	FoodserviceMilkSales		
	FoodservicePurchaseTransaction		
	FoodserviceReimbursementRates		
	FoodserviceSales		
	FoodserviceStaffEnrollmentCount		
	FoodserviceStaffMealCounts		
	FoodserviceStudentEnrollmentCount		
	FoodserviceStudentMealCounts		
	FoodserviceTransaction		
	FoodserviceTransactionDetails		
	FoodserviceTransactionPayMethod		

Item Number	Requirement	Vendor Response	Required Explanation
	GradingAssignment		
	GradingAssignmentScore		
	GradingCategory		
	LEAInfo		
	LearningResource		
	LearningResourcePackage		
	LearningStandardDocument		
	LearningStandardItem		
	Lesson		
	LibraryPatronStatus		
	LocationInfo		
	MarkInfo		
	MarkValueInfo		
	OfficialStudentPeriodAttendance		
	Payment		
	ProfessionalDevelopmentActivities		
	ProfessionalDevelopmentProgram		
	Purchasing		
	ReportAuthorityInfo		
	ReportManifest		
	RoomInfo		
	RoomType		
	SchoolCourseInfo		
	SchoolInfo		

Item Number	Requirement	Vendor Response	Required Explanation
	SectionInfo		
	SectionMarkInfo		
	SIF_AgentACL		
	SIF_LogEntry		
	SIF_ReportObject		
	SIF_ZoneStatus		
	StaffAssignment		
	StaffMeal		
	StaffPersonal		
	StudentAcademicRecord		
	StudentAttendanceSummary		
	StudentContact		
	StudentDailyAttendance		
	StudentDemographicRecord		
	StudentLocator		
	StudentMeal		
	StudentParticipation		
	StudentPeriodAttendance		
	StudentPersonal		
	StudentPicture		
	StudentPlacement		
	StudentRecordExchange		
	StudentRecordPackage		
	StudentResponseSet		

Item Number	Requirement	Vendor Response	Required Explanation
	StudentSchoolEnrollment		
	StudentScoreSet		
	StudentSectionEnrollment		
	StudentSectionMarks		
	StudentSnapshot		
	StudentSpecialEducationRecord		
	StudentTransportInfo		
	TermInfo		
	TestAccommodation		
	TimeWorked		
	VendorInfo		

12. General Requirements – (School/District-level and State-level systems)

12.1 Enrollment/School Data

12.1.1 General

#	Requirement	Vendor Response	Required Explanation
12.1.1.1	Must allow for easy to view/read screens of all student data with simple navigation tools.		
12.1.1.2	Must allow for the Student Name, all ID #s, picture, and all alerts associated with the student to be displayed on the initial student screen whenever viewing individual student data, regardless of the nature of the data. This would include, but not be limited to discipline, attendance, grades, schedules, and demographic data.		
12.1.1.3	Must allow user to view current grades by class, Schedule, and to include all current term grades from the initial student screen.		
12.1.1.4	Must allow a link to view the entire student schedule from initial student screen.		
12.1.1.5	Must allow a link to view all student attendance from initial student screen which includes all daily, period, check in/out, and tardiness.		
12.1.1.6	Must allow a link to view the entire student discipline from initial student screen.		
12.1.1.7	Must allow a link to view the entire student course		

	history from initial student screen.		
12.1.1.8	Must allow a link to view the entire student discipline history from initial student screen.		
12.1.1.9	Must allow for ability to pre-define the student registration data entry screen to meet the individual school's registration data requirements. District would be able to determine "Required fields" on the registration entry screen. Key fields should carry through to other screens to eliminate duplicate entry or an error in data entry.		
12.1.1.10	Must allow for immediate update of central database when students enroll, withdraw, or transfer. -Schools should only be allowed to manually enter transfer to Non-Public, Out-Of-State, Community Based GED Program, and Home School. -System should automatically generate a release (to new school/district) and transfer (from old school/district) when a student tries to enroll in a school and/or district that does not currently own them.		
12.1.1.11	Must allow for enrollment of students from school and/or district level.		
12.1.1.12	Must allow for Beginning of Year ability to Mass inactivate "No Shows" that rolled over from previous year.		
12.1.1.13	Must allow for ability to Mass assign entry codes for the first day of school.		
12.1.1.14	Must allow for the District to Mass and individually upload pictures of students into the database.		

12.1.1.15	Must allow for the ability to assign lockers and combinations, as determined by district administrator – both: automatically manually		
12.1.1.16	Must allow assignments of students to user-defined student groups such as Activities, Beta Club, etc.		
12.1.1.17	Must allow Mass assignments of students to user-defined student groups such as Activities, Beta Club, etc.		
12.1.1.18	Must have multiple comment fields in a student folder with different group level security for each.		

12.1.2 Required Fields

#	Requirement	Vendor Response	Required Explanation
	Must allow for the following required fields and field requirements:		
12.1.2.1	Student ID (a unique number up to 10 digits)		
12.1.2.2	Must allow for a State ID# .		
12.1.2.3	Must allow for District ID#.		
12.1.2.4	Must allow for ID# to be auto-generated.		
12.1.2.5	Must allow for ID# to be manually entered and changed if needed.		
12.1.2.6	Must allow for ID# to be auto-generated with district defined parameters.		
12.1.2.7	Must allow for District ID# to be automatically generated from the State ID#.		
12.1.2.8	Must allow for the user to assign an optional ID# to be		

	used when giving student information to a third party.		
12.1.2.9	First Name		
12.1.2.10	Last Name		
12.1.2.11	Middle Name		
12.1.2.12	Suffix		
12.1.2.13	Legal Name		
12.1.2.14	Former Name		
12.1.2.15	Goes-By Name (if blank – defer to the first name)		
12.1.2.16	Alias (AKA) Name		
12.1.2.17	Parent/Guardian/Contact Information to include: Name, Phone numbers (home, work, cell), Address, Relationship, emergency contact, and Email address: Indicator of student resides with contact. Indicator for receives all student reports.		
12.1.2.18	Foster Home Checkbox		
12.1.2.19	Birth date		
12.1.2.20	Age – calculated by DOB		
12.1.2.21	Birth Certificate Number (Documents in compliance with Mississippi Law 37-15-1)		
12.1.2.22	Place of Birth to include: City State County Country Country of Citizenship Language spoken at home		
12.1.2.23	Gender		
12.1.2.24	Ethnicity (Y or N) Are you of Spanish or Hispanic Origin?		
12.1.2.25	Race - B (Black), W (White), AS (Asian), H		

	(Hispanic), NA (Native American), PI (Pacific Islander), TM (Two or More)		
12.1.2.26	Social Security Number, Security set to field level individually with no association with any other field.		
12.1.2.27	Must allow for the Social Security number field to be **blank** and not affect searches/reports.		
12.1.2.28	Indicator that Parent will not provide SSN.		
12.1.2.29	Enrollment Status, Active, Inactive or Completed.		
12.1.2.30	The ability to report race based on current state and federal standards.		
12.1.2.31	Proof of Residency Type (3 or more fields) drop down with user defined choices.		
12.1.2.32	Date of proof of Residency Verification (more than one field / capture historical changes).		
12.1.2.33	Proof of Residency verified by (Capture historical changes).		
12.1.2.34	Student Addresses (residence, Transportation Map Address, Mailing address).		
12.1.2.35	Student Phone Number		
12.1.2.36	Student Locker Number		
12.1.2.37	Student Locker Combination		
12.1.2.38	Grade level (PreK-12)		
12.1.2.39	State Grade Level (52, 54, 56, 58, 62, 64, 78, and 1-12)		
12.1.2.40	Gifted Status		
12.1.2.41	SPED Status - Security set to field level individually with no association with any other field.		
12.1.2.42	504 Status – Security set to field level individually with no association with any other field.		
12.1.2.43	Student Indicators to include: Tech Ind, LEP Ind, Acad Att, Occ Pass, Capstone, Disable, Disadvantage,		

	Nontraditional, Single, Displaced Homemaker. (Add Immigrant Student)		
12.1.2.44	Career Path Indicator		
12.1.2.45	Dual Enrollment Indicator (Yes or No) (Where) (Multiple Locations)		
12.1.2.46	Title I Indicators Reading Math Language Arts Science		
12.1.2.47	Title II Indicators		
12.1.2.48	Title III Indicators		
12.1.2.49	Title IV Indicators		
12.1.2.50	Title V Indicators		
12.1.2.51	Title VI Indicators		
12.1.2.52	Title X Indicators		
12.1.2.53	LEP Indicator (Multiple choice from Drop-Down list)		
12.1.2.54	Free and Reduced Status indicators (Free, Reduced, or Paid) - Security set to field level individually with no association with any other field.		
12.1.2.55	Lunch Number, manually entered and automatically linked to one of the specified ID numbers.		
12.1.2.56	At Risk Indicators to include but not limited to: English as a second Language, Homeless, migrant, limited English, neglected delinquent, economically disadvantaged, disabled, and discipline. (those required for MDE and ability to add options for district tracking).		
12.1.2.57	Township		
12.1.2.58	Range		

12.1.2.59	Land Section		
12.1.2.60	Checkbox for 16th Section Resident		
12.1.2.61	Checkbox for City Resident		
12.1.2.62	Checkbox for Tuition student		
12.1.2.63	Checkbox for In-District Transfer		
12.1.2.64	Transportation Code		
12.1.2.65	Transportation Mode		
12.1.2.66	Transportation Method		
12.1.2.67	Student Parking Decal Information to Include:		
12.1.2.68	Parking Decal Number		
12.1.2.69	Vehicle ID/Tag #		
12.1.2.70	Driver's License Number		
12.1.2.71	Make of Car		
12.1.2.72	Model of Car		
12.1.2.73	Bus Information to Include:		
12.1.2.74	Bus Driver Name (a.m. and p.m.)		
12.1.2.75	Bus Route (a.m. and p.m.)		
12.1.2.76	Bus Number (a.m. and p.m.)		
12.1.2.77	Transporting District		
12.1.2.78	Resident District		
12.1.2.79	Attending District		
12.1.2.80	Newspaper Publicity Permission (option to be reset EOY)		
12.1.2.81	Web Publicity Permission (option to be reset EOY)		
12.1.2.82	Network Use Indicator/AUP checkbox (option to be reset EOY)		
12.1.2.83	P.E. Waiver (option to be reset)		
12.1.2.84	End of Year Status		
12.1.2.85	Immunization Info to include the following:		
12.1.2.86	Immunization Status (Compliant - Non Compliant –		

	Provisional)		
12.1.2.87	Date of compliance (single date of compliance)		
12.1.2.88	Date for next shot if provisional or non compliant		
12.1.2.89	If immunization form is temporary, a date field to enter date form expires.		
12.1.2.90	Option to enter individual shots with the date		
12.1.2.91	Option to edit information of one sibling and change the information of all siblings. This option can be determined at enrollment. Vendor must describe how the proposed package accomplishes this. Linked fields should include ALL listed below: Residence Address Residence Phone Number Parent or Guardian		
12.1.2.92	Must allow for the ability to search for family members already enrolled in the system at enrollment. Describe how your package accomplishes this.		
12.1.2.93	Must allow the ability to Mass set information for groups of students for any field with group level security:		
12.1.2.93.1	Transportation info (bus number, transportation code)		
12.1.2.93.2	Vocational Indicators		
12.1.2.93.3	Title I Indicator		
12.1.2.93.4	Gifted Indicator		
12.1.2.93.5	SPED Indicator		
12.1.2.93.6	At Risk Indicators		
12.1.2.93.7	Lockers		
12.1.2.93.8	Activities		
12.1.2.93.9	Internet Access Status (Allowed / Not Allowed)		

12.1.2.93.10	Publicity Status (Allowed / Not Allowed)		
12.1.2.93.11	Child Protection (Yes or No) (If Yes, the name should automatically generate an alias)		

12.1.3 Edit Checks

#	Requirement	Vendor Response	Required Explanation
12.1.3.1	Must allow for enrollment data entry to identify and flag illegal characters.		
12.1.3.2	Must allow for enrollment data entry to identify and flag duplicate ID numbers manually entered.		
12.1.3.3	Must allow for enrollment data entry to identify and flag suspicious birthdates (more than 1 year) either side of the normal years of birth for the grade in which the student is being enrolled.		
12.1.3.5	Must allow for enrollment data entry to identify and flag incorrectly formatted data such as zip code, phone numbers, etc.		
12.1.3.6	Must allow for a warning if student is suspended or expelled from another school in the district/state. (When state data is merged, this must change to show if suspended or expelled from any school in the state).		

12.1.4 Search Capabilities

#	Requirement	Vendor Response	Required Explanation
	Must allow for user to be able to search and print student records through the following criteria:		

12.1.4.1	Last name		
12.1.4.2	First name		
12.1.4.3	Middle name		
12.1.4.4	Goes-By Name (if blank – defer to the first name)		
12.1.4.5	Alias (AKA) Name		
12.1.4.6	Student ID Number		
12.1.4.7	Address		
12.1.4.8	Phone Number (Home, Parent, or Student Cell, Parent Work)		
12.1.4.9	Name of Parent/Guardian/Emergency Contacts		
12.1.4.10	Grade level (PreK-12)		
12.1.4.11	State Grade Level (52, 54, 56, 58, 62, 64, 78, and 1-12)		
12.1.4.12	Homeroom		
12.1.4.13	State ID Number		
12.1.4.14	SSN		
12.1.4.15	Specific Course or Class		
12.1.4.16	Specific Teacher		
12.1.4.17	Enrollment Status (Enrolled/Not Enrolled/Active/Inactive/Completed)		
12.1.4.18	Any combination of all student indicators (SPED, Vocational, Gifted, Title I, etc.).		
12.1.4.19	Withdrawal Status (Dropout/Not Enrolled/Inactive/Completed)		

12.1.5 Entry/Withdrawal

#	Requirement	Vendor Response	Required Explanation
12.1.5.1	Must allow for capability to track student's mobility within		

	the district and/or state.		
12.1.5.2	Must allow only an exit/withdrawal code to be entered for currently enrolled students. Additional Required Fields: Requested Transfer Date Who Requested Transfer In- State Transfer Out-Of-State District School Full Mailing Address Optional: Public School Choice		
12.5.1.3	Must allow only an entry/enrollment code to be entered for students NOT currently enrolled.		
12.1.5.4	Must allow for the ability to reinstate classes upon re-enrollment during the same school year.		
12.1.5.5	Must allow for the ability to enter ONLY current state entry and exit codes.		
12.1.5.6	Must allow for the flexibility to have students “assigned” to multiple schools where they are participating in unique programs, yet ensure that the student is counted only once for membership at the home school.		
12.1.5.7	Must allow for the ability to warn of a student with active suspension or expulsion...the system should provide some type of "red flag" warning on the student folder and enrollment screen to let the data entry personnel know that there is a pending discipline entry on the student.		
12.1.5.8	Must allow system administrator the ability to require the State ID # be entered before their status can be marked enrolled.		

12.1.5.9	Must allow for the ability to do multiple entries and exits on a single student in the same month.		

12.1.6 Health

#	Requirement	Vendor Response	Required Explanation
12.1.6.1	Must allow for district to be able to track and maintain the following information (**All access to data must be HIPPA Compliant**) on each student:		
12.1.6.1.1	Physician/HMO's name, address and phone numbers		
12.1.6.1.2	Health history		
12.1.6.1.3	Student medications		
12.1.6.1.4	Insurance coverage information		
12.1.6.1.5	Immunizations & vaccinations		
12.1.6.1.6	Visits to the school nurse/health room		
12.1.6.1.7	Medications to be administered at school		
12.1.6.1.8	Injury or sickness incidents		
12.1.6.1.9	Communicable issues		
12.1.6.1.10	Medicaid information		
12.1.6.1.11	Narrative health-related comments field		
12.1.6.2	Must allow the ability to track and maintain the following screenings with their dates and results:		
12.1.6.2.1	Vision		
12.1.6.2.2	Hearing		
12.1.6.2.3	Height and Weight		
12.1.6.2.4	Scoliosis		
12.1.6.3	Must allow the ability to track health-related items to be determined by the district, such as: Diabetes,		

	Asthma, Seizures, Bee sting sensitivity, Allergies, etc.		

12.1.7 Transportation

#	Requirement	Vendor Response	Required Explanation
12.1.7.1	Must allow for the ability to define the data to be exported for the transportation package.		
12.1.7.2	Must allow for the ability to set a time of day when the SAP will automatically, without any additional user input, generate the transportation, then save that file to a specified location on a computer. Describe how your package accomplishes this task.		

12.1.8 Food Services

#	Requirement (All access to data must be FERPA compliant)	Vendor Response	Required Explanation
12.1.8.1	Must allow for the import of current lunch status from lunch package.		
12.1.8.2	Must allow for the ability to define the data to be exported for the lunch package.		
12.1.8.3	Must allow for the ability to set a time of day when the SAP will automatically, without any additional user input, generate the lunch file, then save that file to a specified location on a computer. Vendor must describe how the proposed package accomplishes this task.		

12.1.9 Student Fees

#	Requirement	Vendor	Required Explanation

		Response	
12.1.9.1	Must allow for the input of current user-defined fee types such as Library fees, lab fees, workbooks, locker, etc. Building and SAP administrators must have the ability to add fields at anytime as needed.		
12.1.9.2	Must allow for the ability to insert and calculate fees owed by individual and groups of students.		
12.1.9.3	Must allow for user to update Student Fees by recording Payments and Receipt of funds, with the option to print.		
12.1.9.4	Must allow for district to be able to update Student Fee data by Writing Off uncollectible fees.		
	Must allow option to display fees – workbook, lab, etc, related to a specific class on the student schedule screens and reports.		
12.1.9.5	Must allow for an indicator in the individual student record – which flags the student as owing school fees.		
12.1.9.6	Must allow for fees associated with specific course to be applied automatically.		

12.1.10 Required Reports

#	Requirement	Vendor Response	Required Explanation
12.1.10.1	Must allow for the following **Student data** reports:		
12.1.10.1.1	Resident Report (City, District)		
12.1.10.1.2	16th Section Resident Report		
12.1.10.1.3	Entry/Withdrawal report by student, with a date range		
12.1.10.1.4	Address list sorted by street		
12.1.10.1.5	Birthday List		

12.1.10.1.6	Printout of students lacking immunization records, and birth certificate verification		
12.1.10.1.7	Error check report for vocational, title I, gifted, SPED indicators		
12.1.10.1.8	Mailing labels for parents & students with options to select student demographic information such as: - Student last name, first, middle - Student address - Student DOB - Student ID Number, preferably State ID		
12.1.10.1.9	User defined reporting of demographic information.		
12.1.10.1.10	Ability to send one mailing to households with multiple siblings in district.		
12.1.10.1.11	End of year retained / promoted list		
12.1.10.1.12	Provide capability to track student's mobility within the district.		
12.1.10.1.13	A list of students not marked for state immunization compliance.		
12.1.10.2	Must allow for the following **School data** reports:		
12.1.10.2.1	Enrollment total report (with race/gender breakdown by grade, school).		
12.1.10.2.2	Enrollment report based on a specified date range which lists students that were enrolled during the specified date range.		
12.1.10.2.3	MAEP (Mississippi Adequate Education Program) report that provides counts for a given date by school, grade level, sped indicator, race, gender, and age.		

12.1.10.2.4	Ethnicity/Race		
12.1.10.2.5	**Gain / Loss** Report - lists entries and withdrawals by date, student and grade with a date range to sort from		
12.1.10.2.6	Student Distribution - a grid sorted by grade and gender that can be loaded from a specific date.		
12.1.10.2.7	At Risk Indicator Report based on the At Risk Categories defined in section 1.2.46.		
12.1.10.2.8	"No Child Left Behind" data reports to include Sex, Race, Lunch Codes, etc.		
12.1.10.3	Must allow for the following **Transportation Reports**: Bus Roster for am and pm routes		

12.2 Attendance

12.2.1 General

#	Requirement	Vendor Response	Required Explanation
12.2.1.1	Must allow for attendance to be updated system-wide as soon as attendance is entered or changed.		
12.2.1.2	Must allow for schools or districts (determined by the system administrator) to specify the absence codes used in absence reporting. Vendor must describe how this is done in the proposed package to include the following:		
12.2.1.2.1	State Absence Codes		
12.2.1.2.2	Local Absence Codes		
12.2.1.2.3	Code Names		
12.2.1.3	Must allow the ability for attendance codes created at the district level to be passed to schools without re-entry of		

	the data.		
12.2.1.4	Must allow for easy navigation from one student to another when entering absences. Describe the process by which teachers enter absences. Describe the process by which office data entry personnel enter absences.		
12.2.1.5	Must allow alternate schools, such as alternative or vocational schools, to enter period and/or daily attendance for only the students attending their schools. Describe how this is done in your package.		
12.2.1.6	Must allow for absences to be entered, stored, and reported based on the grade level of the student at the time of the absence.		
12.2.1.7	Must allow for the ability to track perfect attendance. Perfect attendance rules and criteria should be set by the school SAP administrator. A daily present for this determination is not necessarily the same criteria that will determine ADA present. Describe how your package will accomplish this.		

12.2.2 Daily Attendance

#	Requirement	Vendor Response	Required Explanation
12.2.2.1	Must allow for the ability to re-set daily attendance removing all absent and present codes for a specific date during the current state attendance reporting period. (30-day window only). Describe how this is done in your package.		
12.2.2.2	Must allow for the district SAP administrator to define formulas that will determine what is considered present for funding purposes and the formula that will determine		

	present for awards such as perfect attendance. Describe how your package accomplishes this task.		
12.2.2.3	Must allow for daily attendance to be automatically calculated for both awards and for funding.		
12.2.2.4	Must allow for entry of Discipline for an Out-Of-School Suspension to automatically set daily attendance for the student to either absent unexcused or absent excused, as determined by the Building SAP Administrator, for the days included in the suspension. If the dates within the discipline entry are modified the attendance records should be updated accordingly. Vendor must describe how the proposed package accomplishes this task.		
12.2.2.5	Must allow for groups of students to have their attendance code and reason code set. Vendor must describe how the proposed package accomplishes this task based on the following:		
12.2.2.5.1	Students scheduled into a selected course or section		
12.2.2.5.2	Students assigned to a selected student group		
12.2.2.5.3	Query of students		

12.2.3 Period Attendance

#	Requirement	Vendor Response	Required Explanation
12.2.3.1	Must allow for the ability of the district SAP administrator to re-set period attendance removing all absent and present codes for one or more selected periods for a specific date or date range. Describe how this is done in your package.		
12.2.3.2	Must allow for ID Card swipe for check-in and check out. Describe how your package does this.		

12.2.3.3	Must allow for check-in and check-out data entry process to be quick and easy for the user. Describe in detail, every step, including mouse clicks, required to enter a check-in or check-out. State if accomplishing this process requires leaving another input screen in your package to accomplish the task.		
12.2.3.4	Must allow for marking and unmarking daily or period tardiness for groups of students. Describe how your package accomplishes this.		
12.2.3.5	Upon check in/out, period attendance will be updated according to the time stamp and bell schedule.		
12.2.3.6	Must allow for the district SAP administrator to define formulas that will determine what is considered present for funding purposes and the formula that will determine present for awards, such as perfect attendance. Describe how your package accomplishes this task.		
12.2.3.7	Must allow for the SAP administrator to determine period attendance for the rest of the day upon check in/out.		

12.2.4 Attendance Maintenance

#	Requirement	Vendor Response	Required Explanation
12.2.4.1	Must allow for a method to update or mark previously entered attendance as excused/unexcused for multiple days for one or more students. All selection of students; by individual students, class rosters, predefined groups, etc. Describe how your package accomplishes this.		
12.2.4.2	Must allow for the deletion of multiple absences, within a maximum 60 calendar day window, for a single student, without having to go to multiple pages. Describe in detail		

	this process in your package.		
12.2.4.3	Must allow for the ability of the school or district SAP Administrator to set teacher attendance entry so that teachers are unable to change attendance for a student after a specified amount of time. Describe how your package accomplishes this task.		
12.2.4.4	When entering a withdrawal, display a warning if absences are recorded for a student after the date of withdrawal.		
12.2.4.5	Student must be automatically marked present on the date of withdrawal.		

12.2.5 Must have the following reports:

#	Requirement	Vendor Response	Required Explanation
12.2.5.1	Daily Attendance Report		
12.2.5.2	Excessive absence report – defined by user		
12.2.5.3	Excessive period absence report – defined by user		
12.2.5.4	Excessive absence letters - Must allow for multiple absence letters to same student – defined by user		
12.2.5.5	Excessive period absence letters – defined by user		
12.2.5.6	Excessive tardy report - daily and period – defined by user		
12.2.5.7	Excessive tardy letter – defined by user		
12.2.5.8	Perfect Attendance report		
12.2.5.9	Admit slip for check in/out		
12.2.5.10	Admit slip for excused/unexcused absences		
12.2.5.11	Daily Check In/Out report		
12.2.5.12	Generate complete report for Attendance Officer for students with 5 or more unexcused absences/any		

	suspensions - include demographic information, attendance information, etc.		
12.2.5.13	Skip Report where system looks at period attendance and generates a report of students who might be skipping class.		
12.2.5.14	Attendance Call list - include guardian and phone numbers for absent students.		
12.2.5.15	Notice of Excused or Unexcused Absences Report for Attendance Officers.		
12.2.5.16	Class Attendance Audit – List school rosters sorted by sections within a given period.		
12.2.5.17	Grade book Attendance: Report showing which teachers have not taken attendance.		
12.2.5.18	Weekly Attendance Summary (Meeting): A weekly attendance summary by Section.		
12.2.5.19	Weekly Attendance Summary (Daily): A weekly attendance summary by Teacher.		

12.3 Scheduling

12.3.1 General

#	Requirement	Vendor Response	Required Explanation
12.3.1.1	Must allow for different schedule types such as:		
12.3.1.1.1	Regular scheduling		
12.3.1.1.2	4 X 4 scheduling		
12.3.1.1.3	AB scheduling		
12.3.1.1.4	Modified Block scheduling		
12.3.1.2	Must allow individual schools the flexibility to include the following courses in a single schedule:		

12.3.1.2.1	Semester		
12.3.1.2.2	Quarter		
12.3.1.2.3	Trimester		
12.3.1.2.4	Full year courses		
12.3.1.3	Must allow for multiple schedules within a school:		
12.3.1.3.1	of the same type		
12.3.1.3.2	of different types		
12.3.1.4	Must allow for multiple bell schedules in a single academic day so that two different groups of students in the same school can have two different bell schedules without having two schools and/or schedules in the system.		
12.3.1.5	Must allow for Team Scheduling. Describe how your package accomplishes this.		
12.3.1.5.1	Students may be assigned to teams.		
12.3.1.5.2	Teachers may be assigned to teams.		
12.3.1.5.3	Specific section may be excluded from team scheduling.		
12.3.1.6	Must allow multiple courses per period in a student's schedule to accommodate special programs such as SPED inclusion.		
12.3.1.7	Must allow the ability to copy the current year schedule to next year.		
12.3.1.7.1	Courses to be taught		
12.3.1.7.2	Teachers included in schedule		
12.3.1.7.3	Master Schedule		
12.3.1.7.4	Linked Courses		
12.3.1.8	Must allow the creation of multiple calendars with same bell schedule, and not have to create a calendar for each individual school.		

12.3.1.9	Must allow the ability to set the Next School for students.		
12.3.1.9.1	For all students		
12.3.1.9.2	By grade level		
12.3.1.9.3	For selected group of students		
12.3.1.10	Must allow the ability to mark a schedule as active or inactive.		
12.3.1.11	Must allow the ability to lock a schedule.		
12.3.1.12	Must allow the ability to create rooms from a predefined set of conditions for use when scheduling for new buildings.		

12.3.2 Course Catalog

#	Requirement	Vendor Response	Required Explanation
12.3.2.1	Must allow for entry of State Course Codes by MDE, only with ability to add/modify and inactivate, using the effective date for current and future school year.		
12.3.2.2	Must allow for entry of Local Course Codes.		
12.3.2.3	Must allow Local Course Codes to be linked to a State Course Code.		
12.3.2.4	Include the following fields for all State Course Codes:		
12.3.2.4.1	State Course Code		
12.3.2.4.2	State Long Course Name		
12.3.2.4.3	State Short Course Name		
12.3.2.4.4	State Subject Area		
12.3.2.4.5	Course Type (i.e. Vocational, SPED, Gifted, etc.)		
12.3.2.4.6	Grade Levels for which the course may be taught		
12.3.2.4.7	Updates to the State Course Codes are obtained from MDE and imported into the State Course Codes in SAP		

	by Vendor.		
12.3.2.5	Include the following fields for all Local Course Codes:		
12.3.2.5.1	Local Course Code		
12.3.2.5.2	Local Long Course Name		
12.3.2.5.3	Local Short Course Name		
12.3.2.5.4	Local Subject Area		
12.3.2.5.5	Course Type (i.e. Vocational, SPED, Gifted, etc.)		
12.3.2.5.6	Grade Levels for which the course may be taught		
12.3.2.5.7	Credits		
12.3.2.5.8	Endorsements required to teach the course		
12.3.2.5.9	Default Seating Limit for course		
12.3.2.5.10	Default Passing score for course		
12.3.2.5.11	Grade reported as Alpha or numeric		
12.3.2.5.12	Course included in Honor Roll		
12.3.2.5.13	Course include in GPA/QPA calculations		
12.3.2.5.14	Course included in Graduation Requirements		
12.3.2.5.15	Prerequisites for the course		
12.3.2.5.16	Report to State		
12.3.2.5.17	Print on Transcript		
12.3.2.5.18	Print on Report Card		
12.3.2.5.19	Carnegie Units		
12.3.2.6	Must allow the following fields for Local Courses to be mass set by the SAP administrator at the district/school level:		
12.3.2.6.1	Course Type (i.e. Vocational, SPED, Gifted, etc.)		
12.3.2.6.2	Grade Levels for which the course may be taught		
12.3.2.6.3	Seating Limit for course		
12.3.2.6.4	Passing score for course		
12.3.2.6.5	Grade reported as Alpha or Numeric		
12.3.2.6.6	Course included in Honor Roll		

12.3.2.6.7	Course include in GPA/QPA calculations		
12.3.2.6.8	Course included in Graduation Requirements		
12.3.2.6.9	Course included in IHL Requirements		
12.3.2.6.10	Report to State		
12.3.2.6.11	Print on Report Card		

12.3.3 Course Request

#	Requirement	Vendor Response	Required Explanation
12.3.3.1	Must allow for entry of course request using the following methods:		
12.3.3.1.1	Manual entry for individual student.		
12.3.3.1.2	Select one or more courses from the course list and assign the request to a selected group of students.		
12.3.3.1.3	Mass set one or more courses by grade level.		
12.3.3.1.4	Must allow students and/or parents to enter course request via the online parent communications component.		
12.3.3.1.5	Scanning.		
12.3.3.2	Must allow for modification for course request using the following methods:		
12.3.3.2.1	Individually by student.		
12.3.3.2.2	Mass delete all course requests for all students.		
12.3.3.2.3	Mass delete all course requests by grade level.		
12.3.3.2.4	Mass delete a specific course or group of courses for selected group of students.		
12.3.3.2.5	Mass delete a specific course or group of courses for a grade level.		
12.3.3.2.6	Replace one course request with another for all		

	students.		
12.3.3.3	Must allow the following options to be set for each course request with any selected entry method listed in 3.3.1 or 3.3.2:		
12.3.3.3.1	Type (Required, Elective, Alternate)		
12.3.3.3.2	Preferred Term		
12.3.3.3.3	Preferred Teacher		
12.3.3.3.4	Make request active or inactive		
12.3.3.4	Must allow the electives with Alternate as the Type to be assigned priority of 1st choice, 2nd choice, etc.		
12.3.3.5	Calculate Sections: Calculate the number of sections needed for each course in the current catalog based on course requests.		

12.3.4 Master Schedule

#	Requirement	Vendor Response	Required Explanation
12.3.4.1	Must allow an option to auto create a Master Schedule based on the following: Vendor must describe how the proposed package handles the auto creation of the Master Schedule.		
12.3.4.1	Course request entered for students		
12.3.4.1.1	Endorsements for teachers available for the schedule		
12.3.4.1.2	Endorsements from the course catalog for the courses default seating limits from course catalog		
12.3.4.1.3	Number of periods in the school day defined by the		

	bell schedule		
12.3.4.1.4	Maximum number of preparation by teacher		
12.3.4.2	Must allow multiple sections for each course.		
12.3.4.3	Include the following fields for each section in the Master Schedule:		
12.3.4.3.1	Local Course Code		
12.3.4.3.2	Local Long Name *Populate from Local Course Catalog when the course code is selected – Do not allow update of data in Master Schedule.		
12.3.4.3.3	Local Short Name *Populate from Local Course Catalog when the course code is selected – Do not allow update of data in Master Schedule.		
12.3.4.3.4	State Course Code *Populate from Local Course Catalog when the course code is selected – Do not allow update of data in Master Schedule.		
12.3.4.3.5	Subject Area *Populate from Local Course Catalog when the course code is selected – Do not allow update of data in Master Schedule.		
12.3.4.3.6	Course Type *Populate from Local Course Catalog when the course code is selected – Do not allow update of data in Master Schedule.		
12.3.4.3.7	Grade Levels for which the course is taught *Populate from Local Course Catalog when the		

		course code is selected – Must allow update of data in Master Schedule.		
12.3.4.3.8		Seating Limit for section *Populate from Local Course Catalog when the course code is selected – Must allow update of data in Master Schedule.		
12.3.4.3.9		Passing score for course *Populate from Local Course Catalog when the course code is selected – Must allow update of data in Master Schedule.		
12.3.4.3.10		Grade reported as Alpha or numeric *Populate from Local Course Catalog when the course code is selected – Must allow update of data in Master Schedule.		
12.3.4.3.11		Course included in Honor Roll *Populate from Local Course Catalog when the course code is selected – Must allow update of data in Master Schedule.		
12.3.4.3.12		Course include in GPA/QPA calculations *Populate from Local Course Catalog when the course code is selected – Must allow update of data in Master Schedule.		
12.3.4.3.13		Course included in Graduation Requirements *Populate from Local Course Catalog when the course code is selected – Must allow update of data in Master Schedule.		
12.3.4.3.14		Section Number		
12.3.4.3.15		Teacher		
12.3.4.3.16		Period(s) *Must allow one section of a course to be taught		

	multiple periods.		
12.3.4.3.17	Room		
12.3.4.3.18	Term		
12.3.4.3.19	Team		
12.3.4.3.20	Report to State *Populate from Local Course Catalog when the course code is selected – Must allow update.		
12.3.4.3.21	Print on Report Card *Populate from Local Course Catalog when the course code is selected – Must allow update.		
12.3.4.3.22	Days to Meet		
12.3.4.3.23	Fees		
12.3.4.3.24	Class Load *Populate based on the number of students currently enrolled in the course. Automatically update the class load number as student schedules are modified.		
12.3.4.4	Must allow a teacher to teach multiple courses during any given period with separate or consolidated rosters as desired for grade entry, online attendance, and reports.		
12.3.4.4.1	Provide separate rosters for multiple courses in one period.		
12.3.4.4.2	Provide a consolidated roster for all courses in one period.		
12.3.4.5	Must allow the ability to replace one or more sections for one teacher with another teacher.		
12.3.4.6	Must allow the ability to link multiple courses.		
12.3.4.6.1	Link up to four courses within one period to accommodate linking for all schedule types.		
12.3.4.6.2	Link courses across periods.		

12.3.4.7	Must allow the ability to create, copy, manipulate, and delete multiple master schedules for the purpose of viewing various scenarios of student schedules, teacher assignments, constraints, and course relationships.		
12.3.4.8	Must allow for copying the previous year's schedule, including teacher assignments into a new master schedule.		
12.3.4.9	Course Catalog additional fields so information does not have to be entered multiple times.		
12.3.4.9.1	Option to include or exclude course on report card.		
12.3.4.9.2	Option to include or exclude course on transcript.		
12.3.4.9.3	Ability to denote number of periods per section.		
12.3.4.9.4	Ability to denote valid period for class to start.		
12.3.4.9.5	Ability to denote valid term for class to be scheduled.		

12.3.5 Auto Scheduling

#	Requirement	Vendor Response	Required Explanation
12.3.5.1	The system automatically processes student course requests against the master schedule to produce student schedules.		
12.3.5.2	Must allow multiple scheduling attempts that can be made and stored for retrieval.		
12.3.5.3	Must allow the ability to balance classes across terms.		
12.3.5.4	Must allow for auto scheduling by:		
12.3.5.4.1	Entire School		
12.3.5.4.2	Grade Level		
12.3.5.4.3	Individual Student		
12.3.5.5	Must allow option to overfill sections.		

12.3.5.6	Must allow option to balance classes by academic grade level, race, and gender.		
12.3.5.7	Must allow option to distribute students evenly across sections of the same course.		
12.3.5.8	Auto scheduler should identify required courses and schedule required before elective courses.		
12.3.5.9	Auto scheduler should identify elective courses and schedule electives before alternate courses. Describe how your package accomplishes this.		
12.3.5.10	Auto schedule should identify prerequisite courses and schedule in the appropriate order. For example, if a student has course request for both Spanish I and Spanish II, it should be recognized that Spanish I is a prerequisite for Spanish II and Spanish I should be scheduled prior to Spanish II. (Allow Override) Describe how your package accomplishes this.		
12.3.5.11	The logic for auto scheduling should evaluate and schedule singleton required classes first. After a course is scheduled, the remaining courses should be reassessed. Courses that are made into singletons, because the other periods in a student's schedule are taken, should be scheduled next. Vendor must describe how the proposed package accomplishes this.		
12.3.5.12	Must allow an option to fill all unfilled class periods in all student schedules with a specified course.		
12.3.5.13	Must allow the ability to mass drop a scheduled course for an entire roster and return the scheduled course to a course request.		
12.3.5.14	Must allow the ability to manually schedule and lock courses.		

12.3.5.15	Must allow the ability to rerun the auto scheduler with the following options:		
12.3.5.15.1	Reschedule all courses excluding locked courses.		
12.3.5.15.2	Reschedule all courses including locked courses.		
12.3.5.16	Must allow option to determine periods per meeting, as well as frequency.		
12.3.5.17	Calculate Percent Scheduled: Calculate % of student schedules that have been scheduled in the master schedule at any given time.		

12.3.6 Manual Scheduling

#	Requirement	Vendor Response	Required Explanation
12.3.6.1	Must allow the ability to see student schedule, as well as view master schedule at the same time for scheduling purposes. Describe how your package accomplishes this.		
12.3.6.2	Must allow the ability to mass assign the schedule from the Master Schedule for a selected teacher to a selected group of student.		
12.3.6.3	Must allow the ability to build a schedule by selecting one or more classes from the Master Schedule and assign the schedule to a selected group of student.		
12.3.6.4	Must allow for the manual creation of a schedule for a new student without using the auto scheduler.		
12.3.6.5	Must allow for the creation of a schedule for a new student by entering course request and auto scheduling the single student.		
12.3.6.6	Must allow the ability to modify existing student schedules:		
12.3.6.6.1	Add a new course		
12.3.6.6.2	Delete a selected course		

12.3.6.6.3	Replace a selected course with another course		
12.3.6.6.4	Transfer from one course to another with an option to move grades and attendance		
12.3.6.7	Must allow the ability to change existing schedules and transfer grades and attendance:		
12.3.6.7.1	For an individual student		
12.3.6.7.2	For a selected group of students		
12.3.6.7.3	For an entire class roster		

12.3.7 Other

#	Requirement	Vendor Response	Required Explanation
12.3.7.1	Must allow the ability to assign Homeroom teacher, Guidance Counselor and Scheduling Teams.		
12.3.7.1.1	Auto assign with options to: Balance by race and/or gender and assign alphabetically		
12.3.7.1.2	Mass assign for a selected group of students.		
12.3.7.1.3	Manually assign		
12.3.7.2	Must allow for anytime a student schedule is listed in the regular SAP (Excluding Parent Module and PDA) display the number of students in each class and make that number hot so when clicked, it will display a printable report listing all students in the class.		

12.4 Grades

12.4.1 General

#	Requirement	Vendor Response	Required Explanation

12.4.1.1	Must allow for the ability to use both alpha and numeric grading systems.		
12.4.1.2	Must allow for the ability to assign values to S+, S, S-, etc. (i.e. 80-100 =S, 60-80 = S-).		

12.4.2 GPA/QPA/Numerical Average/Class Rank

#	Requirement	Vendor Response	Required Explanation
12.4.2.1	Must allow for the ability to generate numerical grade average, GPA and QPA. GPA, QPA, and numerical grade averages must be based on formulas entered by the district SAP administrator. Describe how your package differentiates the three types of averages listed above. Describe how the district SAP administrator will be able to create formulas for calculation of GPA and QPA.		
12.4.2.2	Stores student GPA, QPA, and numerical grade average for a single school year.		
12.4.2.3	Automatically recalculates GPA, QPA, and numerical grade average after term grade or historical grade changes.		
12.4.2.4	Calculates a cumulative class rank based on weighted and/or non-weighted GPA, QPA, or numerical grade average.		
12.4.2.5	Calculates Semester and Cumulative GPA, QPA, or numerical average based on weighted and non-weighted grades.		
12.4.2.6	Calculate and store weighted and non weighted GPA, QPA, and/or numerical grade average.		

12.4.2.7	Identify repeated courses due to failure and allow user to set a rule to include all grades, most current grade or highest grade of repeated courses in GPA, QPA, and/or numerical grade average.		
12.4.2.8	Ability to calculate GPA, QPA, and/or numerical grade average for specific subjects such as Math or English.		
12.4.2.9	Ability to generate class ranks at the end of ANY grading period.		
12.4.2.10	Must allow for weighted grades for specific courses. Must allow for weight to be applied, or not applied, to individual student.		
12.4.2.11	Must allow class rank to be based on graduation type and have the ability to include early completers and/or special education students.		
12.4.2.12	All calculations must be carried out to 6 decimal places.		
12.4.2.13	Must allow for student exclusion from class rank.		
12.4.2.14	Detailed display of how the GPA/QPA was derived.		

12.4.3 Term Grade Entry

#	Requirement	Vendor Response	Required Explanation
12.4.3.1	Must allow for the ability to enter term average through the office.		
12.4.3.2	Must allow for the ability to calculate Semester and Yearly Averages based on formulas determined by the district.		

12.4.3.3	Must allow entry of grades earned outside the school - for example; correspondence courses, distance learning, dual enrollment, and previous schools.		
12.4.3.4	Must allow the district or school SAP administrator to set the High and Low posting grade by term, by school. The high and low posting grade may not be the same for every term.		
12.4.3.5	Must allow for the ability to specify a weight percentage to term grades so that the term average is calculated by multiplying the grade by the weight to determine actual grade.		
12.4.3.6	Must allow alternate schools; such as alternative schools and vocational schools, to enter grades for students served.		
12.4.3.7	Must allow for the SAP administrator to LOCK term grades so that it requires someone given specific rights to do so to make further changes to grades in that term. This would include re-posting of grades from the grade book and direct term grade changes.		
12.4.3.8	Must allow the building SAP Administrator the ability to set a minimum and maximum score for term grades.		

12.4.4 Required Reports

#	Requirement	Vendor Response	Required Explanation
12.4.4.1	Must allow the ability to generate report cards & progress reports, detailed or summary.		

12.4.4.2	Ability to generate a skills-based report card using state Competencies & Objectives.		
12.4.4.3	Must allow user to configure format of report cards & progress reports.		
12.4.4.4	Must allow multiple formats for report cards and progress reports – elementary, middle, high school, OR by grade level.		
12.4.4.5	Must allow for the ability to generate the following reports:		
12.4.4.5.1	Failure Lists		
12.4.4.5.2	Honor Roll – based on user-selected criteria Weighted Un-weighted		
12.4.4.5.3	Credits earned		
12.4.4.5.4	Ranking		
12.4.4.5.5	Grade Verification Sheets		
12.4.4.5.6	Non-posted grades report (depending on the process of teachers posting grades from grade book for report cards & progress reports)		
12.4.4.5.7	Numeric grade distribution per course and teacher		
12.4.4.5.8	Missing grades and incomplete grades		
12.4.4.5.9	Cumulative folder labels		
12.4.4.5.10	Output paper size		

12.5 Discipline

12.5.1 General

#	Requirement	Vendor Response	Required Explanation
12.5.1.1	Must allow for secure and confidential discipline information entry and viewing.		
12.5.1.2	Must allow student picture to be displayed when entering discipline data.		
12.5.1.3	Must allow for student discipline history to transfer with the student within district.		
12.5.1.4	Must allow the SAP administrator to maintain state and local codes for incident and dispositions.		
12.5.1.5	Must allow alerts or notifications to be displayed on the discipline entry screen when student is selected for discipline for the following:		
12.5.1.5.1	No Corporal Punishment		
12.5.1.5.2	SPED status		
12.5.1.5.3	Health conditions		
12.5.1.5.4	Counselor recommendation		
12.5.1.6	Must allow option to set attendance based on discipline disposition dates.		
12.5.1.7	Must allow for update of attendance if changes are made to the discipline disposition dates.		
12.5.1.8	Must allow the ability to view all details for all discipline entries for a single student on one page.		
12.5.1.9	Must allow for an alert and show definition when one of the persistently dangerous incident codes is chosen. Principal and/or Superintendent should only be able to report these incidents.		

12.5.2 Discipline code

(Note: In the following statements, the term "Incident" – refers to the event that requires disciplinary action.

The term "Disposition" refers to the action taken by the administration to discipline the student for the "Incident")

#	**Requirement**	**Vendor Response**	**Required Explanation**
12.5.2.1	Must allow discipline incident and disposition codes to be entered at the district level and copied to all schools.		
12.5.2.2	Must allow the district SAP administrator to determine if schools are allowed to enter and/or modify incident and disposition codes.		
12.5.2.3	Must allow the district SAP administrator to identify which incident and disposition codes must be transmitted to the state.		
12.5.2.4	Must allow disposition codes to be marked to indicate state mandated events that must be reported within 24 hours, or next school day.		
12.5.2.5	Must allow entry of Incident Codes to include:		
12.5.2.5.1	Local Code		
12.5.2.5.2	State Code		
12.5.2.5.3	Description		
12.5.2.5.4	Default Demerit Values		
12.5.2.5.5	Mandated Early Reporting Offense (24 hours, or next school day).		
12.5.2.6	Must allow entry of Disposition Codes to include:		
12.5.2.6.1	Local Code		
12.5.2.6.2	State Code		
12.5.2.6.3	Description		

12.5.3 Discipline Entry

#	Requirement	Vendor Response	Required Explanation
12.5.3.1	Must allow for the entry of a discipline record for one student to include the following information:		
12.5.3.1.2	Date and Time of the incident		
12.5.3.1.3	Location of the incident (Bus, Classroom, Hallway, Lunch Room, Playground, School, Off School Property) If Classroom, teacher's name.		
12.5.3.1.4	Description of the incident		
12.5.3.1.5	Incident Code		
12.5.3.1.6	Student's Role		
12.5.3.1.7	Demerits (populate default value from Incident Code – allow the value to be edited as needed)		
12.5.3.1.8	Weapon Type		
12.5.3.1.9	Reported By		
12.5.3.1.10	Period of Incident		
12.5.3.1.11	Disposition Code		
12.5.3.1.12	Disposition Comments		
12.5.3.1.13	Beginning Date for disposition		
12.5.3.1.14	Ending date for disposition		
12.5.3.1.15	Administered By		
12.5.3.1.16	Alternative School District (if Disposition Code involves Alternative School Code).		
12.5.3.1.17	Alternative School District Number (if Disposition Code involves Alternative School Code).		
12.5.3.2	Must allow single entry of discipline records for the same offense for multiple students to include the following information: Create a separate entry for each student		

	involved.		
12.5.3.2.1	Date and Time of the incident		
12.5.3.2.2	Location of the incident (Bus, Classroom, Hallway, Lunch Room, Playground, School, Off School Property) If Classroom, teacher's name.		
12.5.3.2.3	Description of the incident		
12.5.3.2.4	Participant's Role		
12.5.3.2.5	Incident Code		
12.5.3.2.6	Demerits (populate default value from Incident Code – allow the value to be edited as needed)		
12.5.3.2.7	Weapon Type		
12.5.3.2.8	Reported By		
12.5.3.2.9	Period of Incident		
12.5.3.2.10	Disposition Code		
12.5.3.2.11	Disposition Comments		
12.5.3.2.12	Beginning Date for disposition		
12.5.3.2.13	Ending date for disposition		
12.5.3.2.14	Administered By		
12.5.3.2.15	Alternative School District (if Disposition Code involves Alternative School Code)		
12.5.3.2.16	Alternative School District Number (if Disposition Code involves Alternative School Code)		
12.5.3.3	Must allow for multiple students involved in a single incident to be entered and reported as one incident.		
12.5.3.3	Date and Time of the incident		
12.5.3.3.1	Location of the incident (Bus, Classroom, Hallway, Lunch Room, Playground, School, Off School Property) If Classroom, teacher's name.		

12.5.3.3.2	Description of the incident		
12.5.3.3.3	Participant's Role		
12.5.3.3.4	Incident Code		
12.5.3.3.5	Demerits (populate default value from Incident Code – allow the value to be edited as needed)		
12.5.3.3.6	Weapon Type		
12.5.3.3.7	Reported By		
12.5.3.3.8	Period of Incident		
12.5.3.3.9	Disposition Code		
12.5.3.3.10	Disposition Comments		
12.5.3.3.11	Beginning Date for disposition		
12.5.3.3.12	Ending date for disposition		
12.5.3.3.13	Administered By		
12.5.3.3.14	Alternative School District (if Disposition Code involves Alternative School Code)		
12.5.3.3.15	Alternative School District Number (if Disposition Code involves Alternative School Code)		
12.5.3.4	Must allow for entry of an ALERT and the ALERT date on the Disposition page. This will be included on the ALERT page.		

12.5.4 Reports

#	Requirement	Vendor Response	Required Explanation
12.5.4.1	Must allow for the following reports:		
12.5.4.1.1	Incident/Disposition count by gender by school/district		
12.5.4.1.2	Corporal punishment by name, grade, race, sex		
12.5.4.1.3	Suspensions by name, grade, race, sex, school/district		
12.5.4.1.4	Expulsions by name, grade, race, sex, school/district		

12.5.4.1.5	History of Incidents/Dispositions, Incident/Code count		
12.5.4.1.6	Students with No Discipline		
12.5.4.1.7	Number of students referred for discipline		
12.5.4.1.8	Student Discipline Summary		
12.5.4.1.9	Alternative School data		
12.5.4.2	Must allow for the ability to generate graphs for generated reports.		
12.5.4.3	Must allow an unlimited number of discipline letters to be defined.		
12.5.4.4	Must allow for printing of parent notification letters regarding student discipline and attendance problems.		
12.5.4.5	Must allow for the ability to export reports to an Excel spreadsheet.		
12.5.4.6	Must allow for report for “24 hour” events.		
12.5.4.7	Must allow for discipline report by teacher.		

12.6 Special Education (SPED)

12.6.1 General

#	Requirement	Vendor Response	Required Explanation
12.6.1.1	Must allow for indication that a student has been removed from SPED services for historical purposes. *Example: A student is Sped first semester, but not second semester. To generate a successful file to MDE, the first semester schedule needs to be removed as well as the indicator as it stands presently with MSIS. Would like the ability to have a check box of some sort to show the child is withdrawn from SPED on a specific date, remove the indicator and be allowed to leave the schedule data*		

	in the student historical record for future reference.		
12.6.1.2	Must allow for the ability to track SPED eligibility information. (Historical Changes)		
12.6.1.3	Must allow for the ability to track IEP information.		
12.6.1.4	Must allow for the ability to track SPED initial ruling and re-evaluation information.		
12.6.1.5	Must allow for SAP to maintain a history of SPED status and eligibility.		
12.6.1.6	SPED information must meet IDEA and MATTIE-T regulations.		
12.6.1.7	Must allow for the SAP to include two or more course codes on a student's schedule per period for SPED inclusion.		

12.6.2 Required Fields/Codes

#	Requirement	Vendor Response	Required Explanation
	Must allow for the following SPED fields to include (but not limited to) the following:		
12.6.2.1	Active Student is currently enrolled in SPED courses.		
12.6.2.2	Active/Referred: student is already eligible for SPED services.		
12.6.2.3	Contracted: Student is being served by a SPED provider contracted by the district.		
12.6.2.4	Not-Eligible: Student was tested and did not meet requirements.		
12.6.2.5	Referred: Student has been referred for comprehensive assessment.		
12.6.2.6	Other: May be used to track any status, for example		

		LEP.		
12.6.2.7		Inactive Date: Enter date student was removed from program or a former SPED student is no longer in the program due to graduation, withdrawal, or no longer qualifying		
12.6.2.8		Direct: Student receives direct services.		
12.6.2.9		Inclusion: SPED teacher works with disabled student in the regular classroom.		
12.6.2.10		Initial Placement Date: Enter the date initially ruled eligible to receive SPED services.		
12.6.2.11		Primary Disability: Must allow for the ability to choose that student's primary disability.		
12.6.2.12		Case Manager: Must allow for the ability to select the teacher who will be responsible for maintaining this SPED student's record and IEP.		
12.6.2.13		Secondary 1: Must allow for the ability to select subcode disabilities if allowed by disability code.		
12.6.2.14		Secondary Teacher: Must allow the ability to select the subcode disability teachers for each disability.		
12.6.2.15		LRE: Must allow for the ability to select this student's LRE. This is limited according to age, as specified by federal guidelines.		
12.6.2.16		Other Placement: Must allow for the ability to enter the location if the student has been placed in another environment. (Drop down for placement; calculated, user entered, or December tables)		
12.6.2.17		Exit Program Year*:* Must allow for the ability to enter the month and year the student will exit the Special Education program.		
12.6.2.18		Exit Program Description*:* Must allow for the ability to		

	select the Exit Program Description.		
12.6.2.19	Primary Language*:* Must allow for the ability to populate the student's Primary Language.		
12.6.2.20	Referral Date: Must allow for the ability to enter the date the student was referred for comprehensive assessment.		
12.6.2.21	Accept Referral Date: Must allow for the ability to enter the date the Special Ed. Referral was accepted by the Committee. The screening process begins on this date.		
12.6.2.22	Parent Rights (Procedural Safeguards): Must allow for the ability to enter the date on which Parent Rights (Procedural Safeguards) were explained to the parents of the Special Ed. candidate.		
12.6.2.23	Permission to Evaluate: Must allow for the entry of the date on which the *Permission to Evaluate* form was signed by a parent or guardian.		
12.6.2.24	Initial Ruling for Date of Eligibility: Must allow for the entry of the date the student was initially ruled eligible to receive Special Education services.		
12.6.2.25	Anticipated Re-Eval Date: Must allow for the SAP to automatically create a Re-Evaluation Date to be 3 years from the entered Date of Eligibility.		
12.6.2.26	Actual Re-Eval Date: Must allow for the entry of the date the student was re-evaluated.		
12.6.2.27	Permission to Serve: Must allow for the entry of the date on which the *Permission to Serve* form was signed by a parent or guardian.		
12.6.2.28	IEP Beginning / Ending Date: Must allow for the entry of the beginning and ending dates of the IEP.		
12.6.2.29	Ineligible for Special Ed Services: Must allow for the		

	entry of the date the student was declared ineligible for Special Education services, if applicable.		
12.6.2.30	Instructional Remedial Plan: Must allow for the entry of the date an Instructional Remedial Plan will take effect.		
12.6.2.31	State Testing: Must allow for a checkbox to indicate if the student will take part in state testing. (SCD Y/N) Note: Alternate assessment is part of state testing.		
12.6.2.32	Psychological Report Date: Must allow for the entry of the date on which the psychological report was completed.		
12.6.2.33	Medicaid ID: Must allow for the entry of the student's Medicaid ID number in this field, if applicable.		
12.6.2.34	Transition Services Indicator (Y/N)		

12.6.3 Required Reports

#	Requirement	Vendor Response	Required Explanation
	Must allow for the following Student Data reports.		
12.6.3.1	List SPED student count per school and district		
12.6.3.2	List SPED student count by disability		
12.6.3.3	List SPED students by teacher		
12.6.3.4	SPED student listing for resourced students		
12.6.3.5	SPED student listing for self-contained students by Grade Level PK-12 (includes 52, 62, 54, 56, 58, 64, 1-12, and 78) for state reporting. December 1 child count. PEER grade – age on 9/1. (Refer to item 1.2.21)		

12.7 Employee

12.7.1 General

#	Requirement	Vendor Response	Required Explanation
12.7.1.1	Must allow the school to track attendance for employees (NOT FOR PAYROLL PURPOSES).		
12.7.1.1.1	Indicate sick leave or personal leave		
12.7.1.1.2	Identify substitute used, if any, for reporting purposes		
12.7.1.2	Must allow substitute teachers the ability to take attendance for a particular teacher within a certain date range. Substitute will have access only to the assigned teacher's attendance entry screen.		
12.7.1.3	Must allow for employee certification and licensure information to be collected and easily updated on each teacher.		

12.7.2 Required Fields

#	Requirement	Vendor Response	Required Explanation
	Must allow for the following required fields:		
12.7.2.1	Employee ID		
12.7.2.2	Prefix		
12.7.2.3	First Name		
12.7.2.4	Last Name		
12.7.2.5	Middle Name		
12.7.2.6	Suffix		
12.7.2.7	Maiden Name		
12.7.2.8	SSN		
12.7.2.9	Race – B (Black), W (White), AS (Asian), H (Hispanic), NA (Native American), PI (Pacific		

	Islander), TM (Two or More)		
12.7.2.10	Ethnicity (Y or N) Are you Spanish or Hispanic Origin?		
12.7.2.11	Gender		
12.7.2.12	DOB		
12.7.2.13	Physical Address		
12.7.2.14	Mailing Address		
12.7.2.15	Phone Numbers (home, cell, alternate)		
12.7.2.16	Spouse Name		
12.7.2.17	Email Address		
12.7.2.18	Active or Inactive Employee		
12.7.2.19	Endorsements		
12.7.2.20	License Information (Type, Status, Number, Class, Expiration Date – Beginning and Ending)		
12.7.2.21	National Board Certification Type (MTC, Speech/Audiologist, Counselor, Nurses) Certificate # Issue Date Expiration Date		
12.7.2.22	Degree Type: Area, Date, University where Obtained		
12.7.2.23	Highly Qualified Checkbox		
12.7.2.24	Date Hired		
12.7.2.25	Date Terminated		
12.7.2.26	Revoked (Y or N)		
12.7.2.27	Effective Date of Revocation		

12.7.3 Required Reports

#	Requirement	Vendor Response	Required Explanation
12.7.3.1	Must allow for the generation of the following School Data Reports:		
12.7.3.1.1	Teacher detailed or summary Report by school and/or district by grade, subject.		
12.7.3.1.2	Teacher report by race and gender		
12.7.3.1.3	Emergency Certificated Teachers / Administrators / All Types		
12.7.3.1.4	Highly Qualified Reports as required by NCLB (Does License match Course Code teaching?)		
12.7.3.2	Must allow for the generation of the following Employee Data Reports:		
12.7.3.2.1	Certification and Licensure by Certification Area		
12.7.3.2.2	Cumulative number of days absent and reason (personal, sick)		
12.7.3.2.3	Substitute Teacher Lists – Dates and for which teacher, ability to generate by teacher and/or by substitute teacher.		
12.7.3.2.4	Employee Mailing Labels		

12.8 Standardized Tests

12.8.1 General

#	Requirement	Vendor Response	Required Explanation
12.8.1.1	Must allow for the capability to maintain individual student score for the ACT, SAT, PLAN, AP, and all state and federal mandated tests, and district defined.		
12.8.1.1.1	Enter composite score		

12.8.1.1.2	Enter detail information		
12.8.1.2	Must allow for the entry of test data:		
12.5.1.2.1	Manual entry		
12.8.1.2.2	Imported		
12.8.1.3	Must allow the ability to track multiple attempts for the same test.		
12.8.1.4	Must allow the ability to track when the test was taken.		
12.8.1.5	Must allow the ability to track the location where the test was taken.		
12.8.1.6	Must allow the ability to track by teacher.		
12.8.1.7	Must allow the ability to track test data across multiple years by student, test, and/or teacher.		
12.8.1.8	Must allow for the export test result data to statistical software.		
12.8.1.9	Must allow the user to view all standardized test scores on a single screen by the individual student.		
12.8.1.10	Must allow the district to include standardized test scores – composite, as well as detailed information, on transcripts and report cards.		

12.8.2 Required Reports

#	**Requirement**	**Vendor Response**	**Required Explanation**
12.8.2.1	Must allow for the following **Student data** reports:		
12.8.2.1.1	Students who did not take a specific test		
12.8.2.1.2	Students who did not take a specific test within a given time period		
12.8.2.1.3	Students who took but did not pass a test		
12.8.2.1.4	Students who made below a certain score on a test		
12.8.2.1.5	Passed a SATP exam but did not pass corresponding		

	course (Algebra I, English II, Biology, etc.).		
12.8.2.1.6	Multiple attempts list		
12.8.2.2	Must allow for the district to view test results and re-tester lists by student, by group, by school and by test with graphs available.		
12.8.2.3	Must allow for all reports to be exported into an Excel spreadsheet.		

12.9 Student History

#	**Requirement**	**Vendor Response**	**Required Explanation**
12.9.1	Maintain history records for student transcripts indefinitely.		
12.9.2	Maintains transcript records including grades and credits for courses taken in and out of the district.		
12.9.3	Historical student data should be kept for Grades (GPA, QPA, Numerical Grade Average, Honor Roll, Class Rank), Attendance (Daily and Period), and Discipline.		
12.9.4	Historical data should be tied to year of enrollment and grade of enrollment for that year. (I.e. If I want to see all students discipline for last year who were 9th graders, I should be able to see that data).		
12.9.5	Ability to enter previous school/grades into history so that previous school transcript information can be included in any transcripts generated by the SAP.		
12.9.6	Maintains historical grading information for grades PreK–12.		
12.9.7	Stores student and recalculates GPA, QPA, and Numerical Grade Average for multiple years.		
12.9.8	During the data conversion process, historical data from the current packages must be transferred to the historical data in the new state package such that all fields in the new package's		

	historical data are filled if the data is available in the old package.		

12.10 Queries

#	Requirement	Vendor Response	Required Explanation
12.10.1	Must allow users to write and save queries for all data, both current and historical.		
12.10.2	Must allow users to share queries with other users within a school, district, or other districts.		
12.10.3	Must allow the user to access detailed description of database structure necessary for writing of database queries.		
12.10.4	Must allow the capability to preview and print complete query results.		
12.10.5	Must allow the user to export the query results in industry standard formats such as CSV or tab delimited.		
12.10.6	Must allow the ability to generate queries for an individual school, group of schools, or entire district, without requiring programming knowledge or intricate details of tables within the system.		
12.10.7	Provide necessary online and paper documentation/materials to assist users in navigating object databases when developing queries.		
12.10.8	Full disclosure of database schema to, either customers or third party software companies, who need to pull data from the SAP.		
12.10.9	Must allow security restrictions to apply to all data accessed via queries. Security defined for users and groups must apply to query access. For example, if a user does not have rights to view discipline information, they should not be		

	allowed to query discipline information.		
12.10.10	Must allow the ability to query all tables to see date stamp, time stamp, and user name of the person making the change for all updated records.		
12.10.11	Must allow all tables to be linked in the query. For example, pull information from student, enrollment, class, attendance, and discipline; all in one query.		
12.10.12	Must allow conditions to include 'standard' language and include, but certainly not be limited to, conditions, such as IF, AND, NOT, OR, =, <>, <, >, etc.		
12.10.13	Must allow the ability to create queries to cross years. For example, query test data from prior and current years for a specific group of students.		
12.10.14	Must allow queries to be sorted using multiple sort functions. For example, sort by grade, then teacher lastname, then student lastname.		

12.11 System Administration

12.11.1 General

#	**Requirement**	**Vendor Response**	**Required Explanation**
12.11.1.1	Must allow the SAP Administrator to edit dropdown values within all tables in the databases.		
12.11.1.2	Must allow the SAP Administrator to create and report on unlimited user defined fields.		
12.11.1.3	Must allow for the deletion/merge of student records for a single student and for multiple students		

12.11.1.4	Must allow for the deletion/merge of employee records for a single employee and multiple employees.		
12.11.1.5	Must have ability to automatically merge and/or delete widow and orphan records with warning after displaying information that will be deleted. Before deletion, have the user re-enter password.		
12.11.1.6	Must allow the ability to view data for multiple schools from within the same application.		
12.11.1.7	Must allow the district or school SAP administrator to setup form letters, mailing labels, object reports, report cards, pictures, and styles. Must allow these letters, etc., to be copied to other schools.		

12.11.2 User and Groups

#	**Requirement**	**Vendor Response**	**Required Explanation**
12.11.2.1	Must allow for the creation/deletion/editing of user names and passwords, based on security roles.		
12.11.2.2	Must allow for the creation/deletion/editing of user groups to assign specific rights to the users, based on security roles.		

12.11.3 Setup/Maintenance

#	**Requirement**	**Vendor Response**	**Required Explanation**
12.11.3.1	Must allow for the entry and modification of all data in every pull down menu used in the system, except those controlled by the State, based on security roles.		
12.11.3.2	Must allow for entry of district information, such as address, phone number, etc.		

12.11.3.3	Must allow for entry of school data, such as address, phone number, etc.		

12.12 Calendar

12.12.1 General

#	Requirement	Vendor Response	Required Explanation
12.12.1.1	Must allow for the creation of master calendars and other date related tables at the district level to be used by the individual schools without the need for modification. However, allow for modification at the district/school level, if needed.		
12.12.1.2	Must allow the entry of all required information for grading periods, academic sessions, term dates, state reporting dates, and holidays one time in the calendar.		
12.12.1.3	All of the above information, once entered must be available for use by all schools in the district without having to re-enter the information. Describe how your package does this for EACH of the following components: Grading Periods Academic Session Information Term Dates State Reporting Dates Calendar Holidays		

12.12.2 Bell Schedule/Rotation

#	Requirement	Vendor Response	Required Explanation
12.12.2.1	Must allow for multiple bell schedules in a single		

	academic day for the same school.		
12.12.2.2	Must allow the user to define what classes meet on what day.		

12.12.3 Calendar

#	**Requirement**	**Vendor Response**	**Required Explanation**
	Must allow the creation of multiple calendars with same bell schedule, and not have to create a calendar for each individual school.		

12.13 PDA

12.13.1 General

#	**Requirement**	**Vendor Response**	**Required Explanation**
12.13.1.1	Must allow for secure access of student data via PDA device over a secure Website designed for such devices.		
12.13.1.2	Must allow for the export of data from SAP to PDA device for use with devices that are not connected to the Internet. Data requirements described below. Provide the list of supported devices.		

12.13.2 Data Requirements

#	**Requirement**	**Vendor Response**	**Required Explanation**
12.13.2.1	Must allow for the display of student information to include:		
12.13.2.1.1	Student First Name		
12.13.2.1.2	Student Last Name		

12.13.2.1.3	Student Middle Name		
12.13.2.1.4	Student Schedule		
12.13.2.1.5	Current Daily Attendance Status (Web version only)		
12.13.2.1.6	Student Photo (Web version only) ALL Contacts with All Phone Numbers Available, including those not allowed contact with the student		
12.13.2.1.7	Alerts		
12.13.2.1.8	Discipline Summary		
12.13.2.1.9	Parking decal/car tag information		

12.13.3 Security

#	**Requirement**	**Vendor Response**	**Required Explanation**
12.13.3.1	Must allow for access to the PDA pages via the Web to be over an SSL encrypted connection.		
12.13.3.2	Must allow for access to the PDA pages via the Web to be authenticated and only viewable by those with sufficient rights to view the same data on the SAP main pages.		

12.14 Parent Communications

12.14.1 General

#	**Requirement**	**Vendor Response**	**Required Explanation**
12.14.1.1	Must allow access to all components listed below, in real time, such that as changes are made in the data by school personnel, the data changes will be seen by the parent or student at the next refresh of data screen that is affected by the change.		

12.14.1.2	Must allow access only using SSL (128 bit encryption or greater) via the Internet, the state network, or district Intranet using a standard Web browser.		
12.14.1.3	Must allow for a single account that will allow access to every student in the district to which the parent has legal access to the information provided.		
12.14.1.4	Must allow for the System to automatically remove any student from the parents account when the student is marked deceased.		
12.14.1.5	Must allow for student accounts of all non-active students to be removed during end of year processing.		
	Inactive students should not be displayed on parent accounts.		
12.14.1.6	Must allow for the system to automatically remove parents during the end of year process who either had no students assigned to their account before the end of year process or who had all students removed during the end of year processing.		
12.14.1.7	Must allow parents to email the teacher of every class if the teacher's email address is in the system. Any links to email a teacher, or other district personnel, must be in a NON-BOT-SEARCHABLE hidden *mailto* link, or mailed from the Web server itself.		
12.14.1.8	Must allow the administrator to enter an email address for the data processing person at each school to receive emails from parents regarding changes in student demographic information described later.		
12.14.1.9	Must allow for a place where authorized school personnel can enter information regarding school activities and events and provide hot links to Web sites		

	that they may choose to reference that will be shown to parents when they login to the parent communication system if the system administrator gives parents access to this information. This posting must be for the parent component and not the same as any similar communications in the SAP for communications to teachers and other staff. Describe how your package accomplishes this task.		
12.14.1.10	Must allow for a place where authorized district personnel can enter information regarding district level activities that will be shown to parents when they login to the parent communication system if the system administrator gives parents access to this information. This posting must be for the parent component and not the same as any similar communications in the SAP for communications to teachers and other staff. Describe how your package accomplishes this task.		
12.14.1.11	Must allow for the following, based on security roles, to create parent/student accounts. Entry Fields for the account creation form must include ALL of the following:		
	Checkbox for Parent / Student / Other (To determine type of account) Entry Field for First Name (Parent's or Student's First Name) Entry Field for Last Name (Parent's or Student's Last Name) Entry Field for UserID Entry Field for Password (Auto-generated but editable by administrator)		

	Entry Field for Parent Email Address. Checkbox to allow activation of the account with the default to be determined by the District SAP administrator. Checkbox to allow Administrator to allow parent to change password with the default to be determined by the District SAP administrator.		
12.14.1.12	Must allow for the complete Parent Communication component to be 100% Multi-Platform for Windows, Macintosh and Linux, and must run and display correctly using common Web browsers, including Microsoft Internet Explorer, FireFox, and Safari.		
12.14.1.13	Must allow for the ability of teachers and administrators (school and district) to post alerts and informational messages to parents that will be sent to parents as an email alert.		
12.14.1.14	Must allow for the ability to force parent password change individually or system wide at SAP Administrator specified time and/or interval.		
12.14.1.15	Must allow for the ability to send a password reminder via email to the parent and allow for secure password retrieval.		
12.14.1.16	Must allow the district SAP administrator the option to disable the Parent Communication to render it unavailable to parents if deemed necessary.		
12.14.1.17	Must allow for parents to select email alerts, daily, weekly, or monthly that will alert them to the following: ▪ When grades are entered for the student ▪ When a grade is given that falls below a parent		

	specified threshold ▪ When alerts for from the teacher, school administrators and district administrators are posted.		

12.14.2 Security

#	Requirement	Vendor Response	Required Explanation
12.14.2.1	Must allow for access for both parents and students, and others with need for student information.		
12.14.2.2	Must allow for password criteria for parent communication users to be determined by SAP Administrator, and must include the following:		
12.14.2.2.1	Minimum number of Total Characters Required		
12.14.2.2.2	Nature of Characters Required (alphabetical numerical and all other characters)		
12.14.2.2.3	Minimum number of each type above required (Example administrator may require a 6 character password with minimum of 2 numeric characters)		
12.14.2.3	Must allow for the school SAP administrator to determine which components of the parent communication will be accessible to each of the groups of those accessing the system. The groups, Parents, Students, and Others, such as football coaches wishing access to their team's grades, are determined at the time the account is created. (described above)		
12.14.2.4	Must allow for the capability of having a separate username and password for each person accessing the		

	system.		
	On the initial screen, show the name of the school district or school.		

12.14.3 Components

#	**Requirement**	**Vendor Response**	**Required Explanation**
12.14.3.1	COMMENT: It is understood that some vendors may include some of the following components combined into a single component. This is completely acceptable. If such is the case, please attach documentation stating which are combined within your package.		
12.14.3.1	The components to be accessible through the parent communication module are: * Daily Attendance * Period Attendance * Current Grades from the teacher grade books * Term Grades for terms that have been COMPLETED for the current year * Homework Assignments taken from the teacher lesson planner * Discipline * Student Historical Grades * Course Requests * Teacher Comments * Fees * Class Bulletin (allow for web hotlink) * School Bulletin (allow for web hotlink) * District Bulletin (allow for web hotlink) * Student schedule		

	* Update student information * Option to change password * Unofficial Transcript * Standardized Test scores * Student Demographics * Transportation Information		
12.14.3.2	Student Schedule		
	Display will list the student's schedule for the chosen term and will include; course name, teacher name, period taught, and room number. Parent will be able to email teachers listed in the student schedule in the manner described in 14.1.7 from the listed schedule. Must allow for a way the parent can send a message to all teachers on the student's schedule at once.		
12.14.3.3	Daily Attendance		
	Display the date of all absences or tardies in a user chosen time frame and if they were excused or unexcused. Fields displayed must be the date, the attendance code, the attendance status (excused, unexcused), and reason. The display should list Check In or Check Out, the time, Attendance Status (excused/unexcused), and reason.		
12.14.3.4	Period Attendance		
	The component will allow the user to choose a date, then will list the period, Course Name, Attendance Code, and Attendance Status (excused/unexcused), and		

	reason.		
12.14.3.5	Current Grades		
	The component must allow the user to choose a class to view from classes in which a student is enrolled in the chosen term. The display must list data from the teacher grade book for the current term, the date and name of all assignments, the grade for that assignment, the maximum grade for the assignment, and the weight of the assignment, if applicable. The display must also list the student's current average for each course.		
12.14.3.6	Term Grades		
	Display must list all of the student's courses for the year and the term grade for each completed term. The display must list all completed term grades for a class before listing the next class.		
12.14.3.7	Homework Assignments		
	The component must allow the user to choose a date range and a course in the student's current schedule. The display will display all assignments entered by the teacher in the lesson planner section, "Homework Assignments", including the date of the assignment, the assignment, and any other resources associated with the assignment.		
12.14.3.8	Discipline		

	The SAP will have a setup screen with the following discipline components listed. Incident, Incident date, administrator comments, disposition, and dates of disposition. The SAP school administrator or SAP District Administrator will choose for the building, each component that will be displayed for parents to view. The display will show all discipline incidents for the chosen term, and display all components chosen by the SAP building administrator.		
12.14.3.9	Student Historical Grades		
	The display will list all courses that have been completed by the student that are stored in the student's historical record on the SAP. Each line should include; the Year the grade was earned, the grade in which the student was enrolled, the course, credits earned, and the final grade. It should display years in chronological order with the most current year displayed first.		
12.14.3.10	Course Requests		
	The component will allow users to enter course requests for the chosen student. Validate/auto-filter courses chosen against pre-requisite list, course history, and current courses. In the course list, indicate those courses that are required. *Special Request/Comment Option.* • This data should be put in a holding area		

	for validation by those with security access to edit and automatically place in the student's official course requests upon approval. Record should be deleted from holding area when action is taken. • Include link to school graduation requirements. • Describe how your package accomplishes this.		
12.14.3.11	Teacher Comments		
	For each course in the student's current schedule, the display will show all teacher comments entered into the student comment section of the teacher classroom management area for the student.		
12.14.3.12	Fees		
	The component will display the fees entered in the fees section of the teacher classroom management area.		
12.14.3.13	School Bulletin		
	This screen will display information entered by the school and/or district administration.		
12.14.3.14	Request Update to Student Information - This screen will list basic demographic information for the student, and place this in a holding area for review by authorized personnel with the ability to edit and automatically update information upon approval. (available to parents only):		

12.14.3.14.1	Student First, Middle, and Last Name		
12.14.3.14.2	Student Physical and Mailing Address		
12.14.3.14.3	Student Phone Number		
12.14.3.14.4	Parent Phone Number		
12.14.3.14.5	Parent Work Phone Number		
12.14.3.14.6	Parent Cellular Phone Number Parent Email Address		
12.14.3.14.7	Contact Information		
12.14.3.14.8	Alerts		

12.14.4 Online Registration for Parent Communications

#	**Requirement**	**Vendor Response**	**Required Explanation**
12.14.4.1	Must allow for an online process for parents and students to register for access to the parent communications component.		
12.14.4.2	Must allow the following fields to be in the registration information that will be in the online registration form, and allow for the District SAP administrator to choose which of these fields will be required:		
12.14.4.2.1	User Parent/Student First Name		

12.14.4.2.2	User Parent/Student Last Name		
12.14.4.2.3	User Parent/Student Middle Name		
12.14.4.2.4	User Parent/Student Street Address		
12.14.4.2.5	User Parent/Student City		
12.14.4.2.6	User Parent/Student State		
12.14.4.2.7	User Parent/Student Zip Code		
12.14.4.2.8	User Parent/Student Email Address		
12.14.4.2.9	Attached Student First Name (Required)		
12.14.4.2.10	Attached Student Last Name (Required)		
12.14.4.2.11	Attached Student Middle Name		
12.14.4.2.12	Last 4 digits of Attached Student SSN		
12.14.4.2.13	Student Date of Birth		
12.14.4.2.14	State ID Number		
12.14.4.2.15	Attached Student's Grade Level		
12.14.4.2.16	Attached Student's School		
12.14.4.2.17	SAP Administrator defined instructions		
12.14.4.2.18	User defined confirmation page		
12.14.4.3.19	Must allow for multiple entries of students attached to the account as described above.		

12.15 Previous Years Data Archival

#	Requirement	Vendor Response	Required Explanation
12.15.1.1	Each year, all of the data for the student package must be stored in such a way that read only access to all of that year's data is accessible, as it was prior to running the End of Year process. This means that district personnel must be able to enter into any previous year, and both query and report on the data, just as it was immediately prior to running the EOY process. All		

	reports, that were available at the time the EOY process was run must be accessible and must run as they did prior to the EOY process. The query function must remain as it was prior to the EOY process, and function as it did before the EOY process. **Clarification:** Using the example of School Year 2010, all data created in School Year 2010 must be accessible for reports and queries during all subsequent school years, just as it was at the time just before the End Of Year process was run for School Year 2010. This requirement is not retroactive for installs of the winning SAP prior to the awarding (not signing) of the statewide contract. However, any district using the winning SAP, must have this capability for the current year at the time the contract is signed, such that the requirement will be applicable to the district's current year data making the current year's data access after the EOY process is run. **Clarification:** Using the example of School Year 2009, if the statewide contract is awarded during ANY part of School Year 2009, all current customers of the winning bidder will be able to query and report on the data for School Year 2009 for all subsequent years, just as they could immediately prior to the running of the End of year process for School Year 2009.		

12.16 End of Year (EOY)

12.16.1 General

#	Requirement	Vendor Response	Required Explanation
12.16.1.1	Must allow the system administrator the ability to restrict rights so that only the administrator may run the EOY process.		
12.16.1.2	Must allow only for read-only access during EOY process.		
12.16.1.3	Must allow for an edit check to verify that those tasks necessary for a successful completion of the End of Year process have been completed prior to processing the End of Year data.		
12.16.1.4	Force generation of verification of promotion/non-promotion report and graduate/completer report, prior to running EOY process.		
12.16.1.5	Provide the ability to restore data after the EOY process is completed by Individual School.		

12.16.2 Utilities

#	Requirement	Vendor Response	Required Explanation
12.16.2.1	Must allow the user to set the next grade for students:		
12.16.2.1.1	By individual student		
12.16.2.1.2	By grade level		
12.16.2.1.3	By homeroom		
12.16.2.1.4	By promotion status		
12.16.2.2	Must allow the user to set the promotion status for students:		

12.16.2.2.1	By individual student		
12.16.2.2.2	By grade level		
12.16.2.2.3	By homeroom		
12.16.2.3	Must allow the user to set the next school for students:		
12.16.2.3.1	By individual student		
12.16.2.3.2	By grade level		
12.16.2.3.3	By homeroom		
12.16.2.3.4	By promotion status		

12.16.3 Functionality

#	Requirement	Vendor Response	Required Explanation
12.16.3.1	Student grades are written to Student History, including course grades, QPA, GPA, Numerical Average, Honor Roll, Class Rank, as defined in section 9.		
12.16.3.1.1	Must allow the school to determine if dropped courses are posted to Student History.		
12.16.3.1.2	Must allow the school to determine if course history for withdrawn students is posted to Student History.		
12.16.3.2	Student attendance is written to Student History, both daily and period. Must allow the school to determine if attendance for withdrawn students is posted to Student History.		
12.16.3.3	Student discipline is written to Student History. Must allow the school to determine if discipline history for withdrawn students is posted to Student History		
12.16.3.4	Must allow districts the option to purge INDIVIDUAL groups of data during the EOY process:		

12.16.3.4.1	Locker Assignments		
12.16.3.4.2	Bus Assignments		
12.16.3.4.3	Parking Assignments		
12.16.3.4.4	All Parent Communications		
12.16.3.5	Must allow for recalculation of historical GPA and QPA based on new formula.		

12.16.4 Reports

#	**Requirement**	**Vendor Response**	**Required Explanation**
12.16.4.1	Student EOY Report.		
12.16.4.2	Retained report by grade, race, and gender.		

12.17 SIF Compatibility

12.17.1 SIF Certification

#	**Requirement**	**Vendor Response**
12.17.1.2	At implementation, the SAP software must include a SIF agent that is SIFA certified on the 1.5 specification, and will keep the SIF agent up to date with the current SIF version and all required objects. Please attach copies of your certification documentation. Describe your plan of releasing the new SIF versions as they become available.	
12.17.1.2	Vendor must list SIF Certified applications that will be provided by his company as part of this proposal, as posted on SIF Certification Registry: http://certification.sifinfo.org/cert_prodlist.tpl	

12.17.1.3	Vendor must list applications that will be provided by his company as part of this proposal that are SIF Certified.	
12.17.1.4	For each SIF Certified application, Vendor must supply a copy of the Conformance Statement Questionnaire that were completed as part of your Certification Application.	
12.17.1.5	SIF Experience. Vendor must provide a brief history of your company¹s involvement with SIF implementations. This must include the following:	
12.17.1.5.1	Vendor must describe the implementation and support services available from his company during and after deployment of the SIF certified applications that will be provided as part of this proposal.	
12.17.1.5.2	Vendor must describe the functions(s) supported by your application(s) (i.e. subscriber, provider, etc.).	
12.17.1.5.3	Vendor must list other agent vendors, and/or SIF certified applications, that are known to have been deployed by schools and/or districts that have implemented your SIF certified applications that will be provided as part of this proposal. The requested documentation must be attached.	
12.17.1.5.4	Vendor must list the SIF data objects, both published and subscribed, available in the SIF certified applications that will be provided as part of this proposal. Item 11.7 lists all of the SIF required objects.	

12.17.1.5.5	Vendor must list up to three reference schools and/or districts that have purchased and/or deployed your SIF certified application. Please provide customer contacts for each reference.	
12.17.1.5.6	Vendor must provide the total number of customers that have purchased and/or deployed your SIF certified applications that will be provided as part of this proposal.	
	Note that a comprehensive confidential list of clients may be requested if your organization is chosen for further consideration.	

12.17.2 Agent Costs

#	Requirement	Vendor Response
12.17.2.1	Vendor must state whether costs for his agent(s) included in the costs for the software, or if they are separate costs.	
12.17.2.2	Vendor must describe how upgrades to his agent(s) are priced.	
12.17.2.3	Vendor must describe installation support and its cost.	
12.17.2.4	Vendor must describe on-going support and its cost.	
12.17.2.5	Vendor must state whether upgrades are included in software maintenance or annual service agreement.	

12.17.3 Zone Integration Server

#	Requirement	Vendor Response
12.17.3.1	Vendor must state whether his company provide or market a Zone Integration Server (ZIS). (If not, proceed to the next section. Or list the ZIS with which	

	your agent works.)	
12.17.3.2	Vendor must identify the version(s) of the SIF Specification that the ZIS supports.	
12.17.3.3	Vendor must provide a list of references from these implementations that we can contact.	
12.17.3.4	Vendor must indicate whether his proposal include the cost of the ZIS and implementation.	
12.17.3.5	Vendor must provide the cost for upgrades.	
12.17.3.6	Vendor must provide the costs for training and support for the ZIS.	
12.17.3.7	Vendor must describe the training and support provided (documentation, phone support, etc.).	
12.17.3.8	Vendor must indicate what additional software will need to be installed and operational in order for your ZIS to run properly.	

12.17.4 SIF Association Participation

#	**Requirement**	**Vendor Response**
12.17.4.1	Vendor must provide his original date of SIFA membership.	
12.17.4.2	Vendor must list leadership positions held by staff in your organization as part of the Schools Interoperability Framework Association (SIFA), including working groups.	
12.17.4.3	Vendor must list SIFA working groups in which his company actively participates and staff hours of company involvement in each working group.	
12.17.4.4	Vendor must list any and all SIFA activities in which he has participated, including End Users Meetings,	

	Developers Camps, Connect-a-Thons, conference and trade show demonstrations, and quarterly and annual SIFA meetings.	

12.17.5 SIF Support

#	**Requirement**	**Vendor Response**
12.17.5.1	Vendor must state whether his company will assist the district in using SIF to interface his application with other internal and external legacy information systems used by the district.	
12.17.5.2	Vendor must indicate the support that the company provides for agent specific questions. Vendor must describe the escalation procedures.	
12.17.5.3	Vendor must indicate what specific training, support, and development assistance will be provided.	

12.17.6 Updates

#	**Requirement**	**Vendor Response**
12.17.6.1	Vendor must indicate whether his company keep the SIF agent up to date with the current SIF version and all required objects. New objects should be added as new versions of SIF are released, and as additional modules are added to the Mississippi School Administrative Package (i.e. food service, state required test, financial, etc.). Vendor must provide the time frame from date of version release until objects go live.	
12.17.6.2	Vendor must indicate if he will provide custom objects for customers, and also provide the cost and time frame.	

12.17.7 SIF Objects

#	Requirement	Vendor Response	Required Explanation
12.17.7.1	**REQUIRED AT TIME OF CONTRACT AWARD.** Note with "Y" or "N" which of the following objects are currently available with your product, and are SIF certified.		
	AttendanceCodeInfo		
	RoomInfo		
	SchoolCourseInfo		
	SchoolInfo		
	SectionInfo		
	StaffAssignment		
	StaffPersonal		
	StudentContact		
	StudentDailyAttendance		
	StudentPersonal		
	StudentPicture		
	StudentSchoolEnrollment		
	StudentSectionEnrollment		
	TermInfo		
	BusInfo		
	BusRouteDetail		
	BusRouteInfo		
	BusStopInfo		

	StudentMeal		
	StudentTransportInfo		
12.17.7.2	**OTHER SIF OBJECTS**		
	AccountingPeriod		
	Activity		
	ActivityProvider		
	AggregateCharacteristicInfo		
	AggregateStatisticFact		
	AggregateStatisticInfo		
	Assessment		
	AssessmentAdministration		
	AssessmentForm		
	AssessmentPackage		
	AssessmentRegistration		
	AssessmentSubTest		
	Assignment		
	AttendanceCodeInfo		
	Authentication		
	Billing		
	BusEquipment		
	BusInfo		
	BusPositionInfo		
	BusRouteDetail		

	BusRouteInfo		
	BusStopInfo		
	CalendarDate		
	CalendarSummary		
	CurriculumStructure		
	DisciplineIncident		
	EmployeeAssignment		
	EmployeeContract		
	EmployeeCredential		
	EmployeeCredit		
	EmployeePersonal		
	EmployeePicture		
	EmployeeRecertification		
	EmployeeWage		
	EmploymentRecord		
	FinancialAccount		
	FinancialAccountAccountingPeriodLocationInfo		
	FinancialAnnual		
	FinancialBudget		
	FinancialClass		
	FinancialIncomeStatement		
	FinancialTransaction		
	FiscalYear		

	FoodserviceItem		
	FoodserviceItemPortion		
	FoodserviceItemSales		
	FoodserviceItemUnit		
	FoodserviceMealPrices		
	FoodserviceMenuPlan		
	FoodserviceMilkSales		
	FoodservicePurchaseTransaction		
	FoodserviceReimbursementRates		
	FoodserviceSales		
	FoodserviceStaffEnrollmentCount		
	FoodserviceStaffMealCounts		
	FoodserviceStudentEnrollmentCount		
	FoodserviceStudentMealCounts		
	FoodserviceTransaction		
	FoodserviceTransactionDetails		
	FoodserviceTransactionPayMethod		
	GradingAssignment		
	GradingAssignmentScore		
	GradingCategory		
	LEAInfo		
	LearningResource		
	LearningResourcePackage		

	LearningStandardDocument		
	LearningStandardItem		
	Lesson		
	LibraryPatronStatus		
	LocationInfo		
	MarkInfo		
	MarkValueInfo		
	OfficialStudentPeriodAttendance		
	Payment		
	ProfessionalDevelopmentActivities		
	ProfessionalDevelopmentProgram		
	Purchasing		
	ReportAuthorityInfo		
	ReportManifest		
	RoomInfo		
	RoomType		
	SchoolCourseInfo		
	SchoolInfo		
	SectionInfo		
	SectionMarkInfo		
	SIF_AgentACL		
	SIF_LogEntry		
	SIF_ReportObject		

	SIF_ZoneStatus		
	StaffAssignment		
	StaffMeal		
	StaffPersonal		
	StudentAcademicRecord		
	StudentAttendanceSummary		
	StudentContact		
	StudentDailyAttendance		
	StudentDemographicRecord		
	StudentLocator		
	StudentMeal		
	StudentParticipation		
	StudentPeriodAttendance		
	StudentPersonal		
	StudentPicture		
	StudentPlacement		
	StudentRecordExchange		
	StudentRecordPackage		
	StudentResponseSet		
	StudentSchoolEnrollment		
	StudentScoreSet		
	StudentSectionEnrollment		
	StudentSectionMarks		

	StudentSnapshot		
	StudentSpecialEducationRecord		
	StudentTransportInfo		
	TermInfo		
	TestAccommodation		
	TimeWorked		
	VendorInfo		

12.18 Support

12.18.1 Helpdesk

#	**Requirement**	**Vendor Response**	**Required Explanation**
12.18.1.1	Must have enough KNOWLEDGEABLE staff to support all districts serviced at any given time, such that support calls will be returned within a 2 hour time frame of business day. Vendor must define business hours.		
12.18.1.2	The helpdesk must be accessible via Toll free phone call, or online via regular email or some other type of Web support form.		
12.18.1.3	A returned call will be defined as: *A call which is working toward a solution to the problem.* Action toward a solution to the problem by qualified support personnel will only be considered as a response within the 2 hour time frame. *Acknowledgment of the support request will not be considered a returned call counting toward the two hour response time.*		

12.18.1.4	Response will be defined as: *when action is taken toward a solution to the problem by qualified support personnel. The required response time of 2 Hours will still apply, and acknowledgment of the report ticket will not constitute as a response in this context.*		
12.18.1.5	SAP will provide online detailed help resources for EVERY menu item in the entire system.		
12.18.1.6	SAP will provide an up-to-date online knowledgebase/documentation for each module within the system.		

12.18.2 Upgrades

#	**Requirement**	**Vendor Response**	**Required Explanation**
12.18.2.1	All Districts will be made aware of all upgrades and changes a minimum of 24 hours prior to the upgrade.		
12.18.2.2	If changes are made to the application such that upgrades to ancillary software, such as Adobe Reader, Adobe Flash, etc., are required, the software or links to the software must be provided by the vendor online.		
12.18.2.3	Assistance must be provided during upgrades, if required.		

12.18.3 Maintenances

#	**Requirement**	**Vendor Response**	**Required Explanation**
	System-wide maintenance must be done after school hours of operation to prevent disruption of services. District SAP administrators must be notified via email,		

	a minimum of 24 hours in advance of the maintenance taking place**.**		

12.18.4 Training

#	**Requirement**	**Vendor Response**	**Required Explanation**
12.18.4.1	Within each module, a 'Help' function must be available to assist school and district users. This function must be updated or added as new releases are installed.		
12.18.4.3	Must provide an optional separate training database for district to perform internal training. Provide a description as to how this may be accomplished.		
12.18.4.4	Initial training should be face-to-face, hands-on training provided by the vendor. Define the initial training process.		
12.18.4.5	Must provide complete, up-to-date, user manuals that cover all areas of the proposed SAP.		
12.18.4.6	On-demand training videos should be available for most commonly used SAP modules.		
12.18.4.7	On-going training should be provided.		
12.18.4.8	Special customized district training will be provided for an additional pre-defined charge.		

12.18.5 Documentation

#	**Requirement**	**Vendor Response**	**Required Explanation**
12.18.5.1	Must allow for all online help to be displayed in a printer friendly format, not just a printout of the display page with menus, etc.		

12.18.5.2	Must allow for online help to be available for each section of the SAP, so that a user can get instructions on items in the current window.		
12.18.5.3	Must allow for online help to be available for all modules at the time the pilot districts implement the SAP as a result of this contract.		
12.18.5.4	Must allow for complete documentation for all SAP changes to be disseminated to all school and district SAP administrators, PRIOR TO the installation or inclusion of the upgrade.		
12.18.5.5	Must allow for access rights to the documentation for a module to be determined based on security roles.		
12.18.5.6	**TYPES OF DOCUMENTATION**		
	Must allow for documentation to include identification of all fields on the screen and all tables from which pre-populated lists, such as dropdown lists, are pulled.		
12.18.5.7	Must allow for documentation to identify how to complete a task. (For example, Scheduling documentation should include all setup that must be completed prior to beginning the scheduling process for next year, as well as how to maximize the benefits of the auto-scheduler or Enrollment documentation, should include all steps necessary to enter and enroll a new student.)		

12.18.6 Backup/Recovery

#	Requirement	Vendor Response	Required Explanation
12.18.6.1	Backup of all SAP data is the responsibility of the vendor. Vendor must p**rovide a description** on how		

	this will be accomplished.		
12.18.6.2	If backup has to be restored, option must be available to restore by individual school or district.		
12.18.6.3	District should have the option to backup data on equipment located within the district.		

12.19 Security

12.19.1 General

#	**Requirement**	**Vendor Response**	**Required Explanation**
12.19.1.1	Must allow for the authentication via standard LDAP, if chosen by the administrator. Including password verification and grouping via the LDAP server.		
12.19.1.2	Must allow for security to be maintained by the school SAP administrator, if chosen by the district SAP administrator. School SAP administrator could only have access to security settings for her/his school.		
12.19.1.3	Must allow for system to use SSL (min 128 Bit) for all transmission and receipt of data.		
12.19.1.4	Must allow for security to be based on “Username” and “Password”.		
12.19.1.5	Must allow for the District SAP administrator to “lock out” all users at once, so only the system administrator will have access to the system.		
12.19.1.6	Must allow for the ability of the District SAP administrator to notify all current users, via message to their screens, a warning that the system is about to be locked in a specified number of minutes, specified		

	by the SAP administrator. (see 19.1.5)		
12.19.1.7	Must allow for the ability of the District SAP administrator to restrict school site users from changing pre-defined tables, but allow the District SAP administrator to allow them to view the tables if the District SAP administrator chooses.		

12.19.2 Users/User Groups/Rights

#	**Requirement**	**Vendor Response**	**Required Explanation**
12.19.2.1	System must allow for the School and District SAP administrators to create and edit users and user groups.		
12.19.2.2	System must allow for the assignment of group rights down to the FIELD level if specified in other parts of this document, and to the page level for all other data, reports, utilities, etc.		
12.19.2.3	Must allow where security is specified to the field level, NO field should be combined in any way with another field so that a group can have rights to any one field level security field, without having to have access to any other.		
12.19.2.4	Must allow for access by teachers, to student records of ONLY those students who have been assigned to them in a class or a homeroom.		
12.19.2.5	Must allow for the District SAP administrator to determine if groups are maintained at the district or the school level.		
12.19.2.6	Must allow for read-only student data access, based on specific grouping and security access. Ex. Athletics; clubs; department chair; etc.		

12.19.3 Passwords

#	Requirement	Vendor Response	Required Explanation
12.19.3.1	Must allow district administrator to set the requirements for passwords - length and alpha/numeric characters.		
12.19.3.2	Must allow the district or school SAP administrator to force an individual to change their password at the next login, without forcing anyone else.		
12.19.3.3	Must allow the district SAP administrator to force a group or system-wide password change.		

12.19.4 User Access

#	Requirement	Vendor Response	Required Explanation
12.19.4.1	Must allow the district SAP administrator to define a time length, and force the system to log any user off the system if they remain dormant for the specified time length. This could be a complete logout or a forced re-entry of password for screen access.		
12.19.4.2	Must allow, if the Vendor chooses to use the force entry of a password in 19.4.1, for the ability of any person accessing that computer, to be able to log the user out without having to close the browser.		
12.19.4.3	Must allow for the district SAP administrator to set specified times when users may login, by user groups.		
12.19.4.4	Must allow for the district SAP administrator to set a pre-defined number of login attempts before the system renders the account temporarily disabled.		
12.19.4.5	Must allow for the district SAP administrator to set the		

	length of time an account will be disabled from 19.4.4		

12.19.5 System Logs

#	Requirement	Vendor Response	Required Explanation
12.19.5.1	Must allow for the system to provide anyone with proper credentials access to the system logs.		
12.19.5.2	Must allow for system log to include, for all actions, the user, IP address, date and time stamp, and the action for all entries and changes in the system.		
12.19.5.3	Must allow for logs to be filtered for individual users and for a specified time range.		
12.19.5.4	Must allow for log displays to be viewed and printed.		

12.19.6 Reports

#	Requirement	Vendor Response	Required Explanation
12.19.6.1	Must allow for the display and printing of login statistics for all users. This report will list users and IP address, when they logged in and when they logged out for a specified date range. Filter criteria should allow search by user or by user group within a school or district wide. This will include unsuccessful login attempts.		
12.19.6.2	Must allow for a Group Rights report for display and printing. Filter by all groups or individual groups. Must display all rights allowed for that group.		
12.19.6.3	User Rights report for display and printing. Filter by All or by individual users. Must list all rights from all groups to which the user is assigned, without		

	duplication on the report.		

12.20 Classroom Management

12.20.1 General

#	Requirement	Vendor Response	Required Explanation
12.20.1.1	Must allow for all functions described for the Building SAP administrator to also be performed by the District SAP administrator.		
12.20.1.2	Provide integrated teacher grade book program that gets rosters from the scheduling component, and is updated as students are placed in or removed from the class. Updates should be seen the next time the grade book is accessed by the teacher without having to force synchronizing the list with the main database.		
12.20.1.3	Must allow for teachers to be able to view individual student records starting from within the classroom management module that include the following. What teachers may view within the student record will be determined by the building SAP administrator. Student Schedule Student Contact Information Student Demographic Data Student Discipline Information Student Attendance information Student Historical Grade Data Student Historical Discipline Data Student Historical Attendance Data		
12.20.1.4	Must allow for teachers to create customized seating		

	charts. These should be viewable by substitute teachers.		
12.20.1.5	Must allow for staff with sufficient access rights to access teacher classroom management components as if they were the teacher. Access rights must be assignable by school.		
12.20.1.6	Must allow for teachers to generate, view, and print a grade distribution chart for any assignment chosen, as well as current class averages.		
12.20.1.7	Must allow for the display of the weighted average for weighted courses.		
12.20.1.8	Must allow for the display of alerts associated with students when the class roster and attendance entry form is displayed.		

12.20.2 Grade Entry

#	**Requirement**	**Vendor Response**	**Required Explanation**
12.20.2.1	Must allow for teachers to create an unlimited number of assignments.		
12.20.2.2	Must allow for teachers to assign weight to individual assignments.		
12.20.2.3	Must allow teachers to specify the date when an assignment and therefore grade will be displayed to parents. This will allow teachers to create assignments in advance without confusing parents. Assignments not shown to parents will NOT be part of the calculated average that is shown to parents.		
12.20.2.4	Must allow for teachers to create extra credit assignments that effect individual students or all		

	students.		
12.20.2.5	Must allow for teachers to name assignments with names up to 64 characters long, including spaces and non-alphanumeric characters.		
12.20.2.6	Must allow for teachers to enter letter or numeric grades.		
12.20.2.7	Must allow for teachers to enter numeric grades out to a minimum of 2 decimal places and the fractional portion should be considered significant and used in the calculation of the student's average.		
12.20.2.8	Must allow for teachers to enter a class default grade which will automatically be given to all students in the class.		
12.20.2.9	Must allow for automatic screen updates to update averages every time a grade is submitted, regardless of the mechanism used. (Individual entry, group entry, single student multiple grade entry).		
12.20.2.10	Must allow teachers the ability to drop either the lowest grade, or the most costly grade for each student in a class as a SINGLE action on the part of the teacher. Teacher should be able to choose, highest, lowest, or most costly, and upon submission, the system will drop that grade and note it in the grade book as a dropped grade. Teachers must be able to do this multiple times if they so choose. Teachers must be able to do this by selecting students to have grades dropped, or by the entire class.		
12.20.2.11	Must allow for teachers to Excuse (Exempt) students on any assignment and Indicate that no grade has yet to be given with a different code that does not		

	calculate into the current average.		
12.20.2.12	Must allow for assignments created by a teacher to be included in multiple classes taught by a teacher.		
12.20.2.13	In the grade book, when a new student is entered, automatically exempt that student from all assignments prior to enrollment, with the option of allowing the teacher to change those scores.		
12.20.2.14	When creating assignments, teachers will be able to enter maximum possible and passing score.		
12.20.2.15	Validate entered grades.		

12.20.3 Grade Book Display

#	**Requirement**	**Vendor Response**	**Required Explanation**
12.20.3.1	Must allow for the system to display the Mean, Median, and Mode for each assignment and for the class averages. These will be updated every time the grade averages are re-calculated by the system.		
12.20.3.2	Must allow for teachers to sort the names, automatically in ascending or descending alphabetical order by last name, or list the names in a custom order. This sorting criterion should be the default. Once the student order is set, the system must maintain that setting until it is changed.		
12.20.3.3	They may also order by grade average in ascending or descending order.		
12.20.3.4	Must allow teachers to sort the grade book assignments in ascending or descending order based on the assignment date.		
12.20.3.5	Must allow for current average, based on weights		

	specified in the grade book setup, to be displayed and updated on every screen refresh where averages are displayed.		
12.20.3.6	Must allow for teachers to choose to enter grades by assignment (moving from student to student in the order displayed), by Student moving from assignment to assignment from left to right in the order displayed, or by individual assignment.		

12.20.4 Grade Book Posting

#	**Requirement**	**Vendor Response**	**Required Explanation**
12.20.4.1	Must allow for Grade averages for students in a class to be posted as end of term grades by either the Teacher or by the Office at anytime. A teacher may re-post the grades as often as she/he wishes, and all grades will be updated to the last posting.		
12.20.4.2	Must allow for building SAP administrator be able to prevent posting of grades by teachers.		
12.20.4.3	Must allow for final grades which are posted to be automatically reflected in transcripts from the time of that posting until changed.		

12.20.5 Attendance Entry

#	**Requirement**	**Vendor Response**	**Required Explanation**
12.20.5.1	Must allow for teachers to be able to enter attendance either once per day or by period, as determined by the school administration.		
12.20.5.2	Must allow for attendance status to default to any		

	condition determined by the school administrator for the first attendance entry screen of the day. (Usually Present or Absent) Teachers will choose the appropriate attendance condition for each student, and this information will be available to the office immediately after the teachers submit the data.		
12.20.5.3	Must allow for students with pre-approved absences to be flagged and their condition will not be changeable by the teacher.		
12.20.5.4	Must allow for student birthdays to be noted on the Attendance entry screen and the class roster screen.		
12.20.5.5	Must allow for attendance conditions from the previous period to be shown on the attendance entry screen of the next period, including changes made in the previous period.		
12.20.5.6	Must allow for office entries involving attendance for the current day to be automatically shown on the teacher attendance entry form at the next refresh of that page.		
12.20.5.7	Must allow for the office to easily assign substitute teachers to a teacher's attendance form and seating charts so that the substitute can take attendance. The school system administrator must be able to limit access to any component in the Classroom Management module.		
12.20.5.8	Must allow for the school SAP administrator to determine the range of time a teacher will be allowed to enter attendance.		

12.20.6 Term Grade Formulas

#	Requirement	Vendor Response	Required Explanation
12.20.6.1	Must allow for final grades, computed by the system, to be overridden by the teacher or the office, but the computer grade must be maintained.		
12.20.6.2	The computational formula for final grades, determined by the school SAP administrator, must populate all grade books from a single template pushed to the grade books by the school system administrator. After that, any class formula may be changed without affecting other classes.		

12.20.7 Grade Calculation

#	Requirement	Vendor Response	Required Explanation
12.20.7.1	**Point System**		
12.20.7.1.1	The teacher determines the maximum points for each assignment, and the average is determined by dividing the total points earned by the total possible points.		
12.20.7.1.2	The system must provide a template called "Point System" for administrators or teachers to choose.		
12.20.7.2	**Weighted System**		
	The building SAP administrator and teachers must be able to define, store, and use an unlimited number of Weighted grade templates as described below.		

12.20.7.2.1	The SAP must allow for multiple categories of grades with each being assigned a % of final grade value. When creating assignments, teacher will choose the category from a list of categories allowed and the grade will be weighted the specified % value when the final grade is calculated.		
12.20.7.2.2	The SAP user will determine all category names.		
12.20.7.2.3	When complete, all % values for the categories must add up to be 100, and if not, the system must not allow the category to be saved.		
12.20.7.2.4	All averages will be computed throughout the grading period using prorated weights of all categories with current grades (to 100%), if any categories are not represented at the time of the calculation.		
12.20.7.2.5	Teachers will have the option of weighing each individual assignment within the category.		
12.20.7.2.6	The SAP must allow the building SAP administrator to determine if Weighted Grade Definition templates are to be editable by teachers or not. The template can be pushed to the classes by the building SAP administrator, and then edited by teachers without modifying those templates of other teachers.		
12.20.7.2.7	The templates can be pushed by the building administrator by whole school, individual class, by teacher, or by course.		

12.20.7.2.8	The "Weighted System" must allow the assignment of weights out to 3 decimal points for the term average.		
12.20.7.2.9	The input form for pushing the templates must allow the building administrator to choose the template to push, then choose:		
12.20.7.2.9.1	"Whole School" and all classes in the school will get the template. No listing of classes, courses, or teachers may be involved in this process.		
12.20.7.2.9.2	"Courses" where a list of courses that is in the schools current schedule will be listed from which the administrator will choose to receive the chosen template.		
12.20.7.2.9.3	"Teachers" where a list of all teachers that are in the schools current schedule will be listed from which the administrator will choose to receive the chosen template.		
12.20.7.2.9.4	"Classes" where a list of all classes that are in the schools current schedule will be listed from which the administrator will choose to receive the chosen template.		
12.20.7.2.9.5	For all lists of courses and classes, the administrator will have the option to sort by Course Code or by Course Name and the field chosen, as the sort criteria will be displayed somewhere in the list.		
12.20.7.3	**Simple Average**		
12.20.7.3.1	This template will simply assign all		

	assignments possible points of 100, and all assignments will be given a percentage value and the final grade will be calculated by averaging all of the percent scores.		
12.20.7.3.2	Teachers must be able to weight grades for individual assignments if they choose to do so.		
12.20.7.4	Must allow for the building SAP administrator to be able to choose if the "Averaging System" and "Point System" will be available to be listed for the school to choose from.		
12.20.7.5	When listing available templates from which teachers and administrators are to choose, "Averaging System" and "Point System" must be listed with all user defined weighted templates if they are made available for listing by the building SAP administrator.		

12.20.8 Lesson Plans

#	**Requirement**	**Vendor Response**	**Required Explanation**
12.20.8.1	Must allow for Mississippi Curriculum Standards to be preloaded to choose from.		
12.20.8.2	Must allow the ability to enter lesson plans by district, state, or national standards.		
12.20.8.3	Must allow for teachers to be able to share lesson plans if desired.		
12.20.8.4	Must allow for principals to be able to view lesson plans on screen or print reports.		
12.20.8.5	Must allow for lesson plans to include the following		

	fields:		
12.20.8.5.1	Subject (drop down of classes taught by teacher as in grade book)		
12.20.8.5.2	Lesson Title		
12.20.8.5.3	Date range for lesson		
12.20.8.5.4	Objectives/Goal		
12.20.8.5.5	State Standards		
12.20.8.5.6	Method of teaching - (drop down of methods available by district or school)		
12.20.8.5.7	Method of evaluation - (drop down of method available by district or school)		
12.20.8.5.8	Resources for lesson		
12.20.8.5.9	Homework assignments - option to display in parent module and to create assignment in grade book		
12.20.8.5.10	Technology to be used in lesson		
12.20.8.5.11	Activities		
12.20.8.6	Must allow for the ability to build a Lesson plan bank that remains from year to year		
12.20.8.7	Must allow for the ability to mark activities to be automatically included as an assignment in the grade book.		
12.20.8.8	Must allow for homework entries to automatically be posted to the Parent Communication module.		
12.20.8.9	Must allow for the ability to copy lesson plans to other periods in the teacher's schedule, other terms in the school year, and to other school years.		
12.20.8.10	Must allow for the ability to share lesson plans with other teachers at the same school and with teachers in other schools in the district.		

12.20.8.11	Must allow for the ability to move or copy a lesson plan to a different date.		
12.20.8.12	Must allow for the ability for building-level administrators to review lesson plans for all teachers in their building.		
12.20.8.13	Must allow for the ability to enter URLs in the assignment field so that those viewing the assignment will be able to click on it and it displays the linked page in a different browser window.		
12.20.8.14	Must allow for administrators to create a non-compliance report that will list teachers who have no entries in their lesson plans, for any course in the teachers schedule within a user chosen date range, listing the teachers name and the course missing the plans.		

12.20.9 Reports

#	Requirement	Vendor Response	Required Explanation
12.20.9.1	**GRADEBOOK REPORT:** A report that prints the entire grade book, assignment names, student names, grades, and current averages, as well as the Mean, Mode, and Median for all assignments.		
12.20.9.2	**PROGRESS REPORT:** Teachers must be able to generate individual student progress reports that include: Every Assignment Name Every Assignment Grade Course names. Course Grade Average		

	Individual Student Comments Credits earned Total excused absences Total unexcused absences Total tardies. Comment Field (See below)		
12.20.9.3	Must allow for these progress reports to be generated by individual student, individual class, or by teacher, so the teacher will be able to generate a single report that will generate a progress report for all of his/her students.		
12.20.9.4	Must allow for the report to be able to sort the output by student name within course, or by course within student name, to facilitate teachers teaching different students throughout the day or the same students throughout the day. The report must also allow or disallow page breaks between students.		
12.20.9.5	Must allow for the ability of teachers to email progress reports to parents either individually, or by class.		
12.20.9.6	**MISSING GRADE REPORT FOR STUDENTS**		
12.20.9.6.1	Report will print all missing grades for students in a class, or for a single student in multiple classes for the same teacher.		
12.20.9.6.2	The report will include the Student's Name, the course, and list all assignments with missing grades for that course.		
12.20.9.6.3	These reports can be generated by individual student, individual class, or by teacher, so the teacher will be able to generate a single report		

	that will create Missing grades reports for all of his/her students.		
12.20.9.6.4	The report must have the ability to sort the output by student name within course, or by course within student name, to facilitate teachers teaching different students throughout the day, or the same students throughout the day.		
12.20.9.6.5	The report must also allow or disallow page breaks between students.		
12.20.9.6.6	Reports must include incomplete grades.		
12.20.9.7	**MISSING GRADE REPORT FOR CLASSES**		
12.20.9.7.1	Report will allow teachers to print a list of the Names for all students who are missing assignments in a class; and beneath the student, list every assignment missed by that student.		
12.20.9.7.2	The report must have an option to page break between students.		
12.20.9.7.3	The report must allow the teacher to print Grade reports for all classes taught, with the option to page break between students or between classes.		
12.20.9.7.4	Reports must include incomplete grades.		
12.20.9.8	**BLANK GRADE ENTRY SHEET**		
12.20.9.8.1	Teacher must be able to choose either a specific class or all of his/her classes for generating this report.		
12.20.9.8.2	There will be a page break between classes if multiple classes are printed.		

12.20.9.8.3	Report must be printed in landscape format.		
12.20.9.8.4	Report must list all students in the class in the order currently displayed in the grade book.		
12.20.9.8.5	Report must be printed in spreadsheet format and allow for the entry of the assignment name at the top of each column.		
12.20.9.8.6	Report must print only 8 columns, including the column for student names, for grade entry, and the column width must be sufficiently wide to take up all of the printable space on the sheet to allow for large grade and assignment name entry fields.		
12.20.9.8.7	Report must limit Students names listed to 30, and they must be listed as they are in the teacher's online grade book entry form.		
12.20.9.8.8	Report header must include Course Name, Period Taught, Teacher Name, and Term.		
12.20.9.9	**TEACHER GRADE VERIFICATION**		
12.20.9.9.1	Teacher should be able to choose a specific class for generating report, with options to choose all or one of the following report options, to run by Term 1, Term 2, S1, Term 3, Term 4, S2, Final Avg.		
12.20.9.9.2	Option of printing Numeric Grades, Alpha Grades, or Both types of grades.		
12.20.9.9.3	Option to show Exam Grade.		
12.20.9.9.4	Ability to run on Enrolled or Not Enrolled students in the teacher's class.		
12.20.9.9.5	Report should list student name and average in the order that the teacher has the students in		

	grade book settings.		
12.20.9.9.6	Report Header that lists the subject, period, and teacher name.		
12.20.9.10	Must allow administrators the ability to list teachers who have not entered attendance by period to allow for compliance determination.		
12.20.9.11	Must allow for administrators to be able to list the date of the last time a teacher entered a grade for a particular subject, and the last time a teacher created an assignment for a particular subject. This would be to monitor compliance with policies regarding the timely entry of grades.		

12.21 Counseling Services

12.21.1 General

#	**Requirement**	**Vendor Response**	**Related Attachments**
12.21.1.1	Must allow for the ability for authorized staff to view and print a student's current grades for ALL CLASSES at once. Staff member should be able to search for the student's name and then list all classes with current grades from the teacher grade books, all completed term grades, and all historical grades that are stored in student history.		
12.21.1.2	Must allow for the ability to view and print a student's transcript showing at least 5 years of grades.		
12.21.1.3	Must allow for the creation of a multi-year (minimum 4) plan for students, which includes the courses the student is to take throughout his/her years in high school.		
12.21.1.4	Must allow for the editing of any course listed in the		

	multi-year plan.		
12.21.1.5	Must allow for any or all classes listed in a multi-year plan to be added to course requests by the staff member automatically by a mechanism built into the multi-year plan module. The SAP will allow the staff member to choose the courses listed in the multi-year plan that is to become course requests. The staff member should then be allowed to click a single button to make course requests for the chosen courses in the multi-year plan. Describe how your package accomplishes this task.		
12.21.1.6	Must allow for the district to upload the data from the Mississippi Subject Area Tests directly into the SAP. MDE should be allowed to do the upload as soon as they have access to the statewide primary database that this RFP will create.		
12.21.1.7	Must allow for counselors and other authorized staff to enter notes from counseling sessions with students. Security for these notes fields should be to the field level allowing access to the fields to only those authorized to see it.		
12.21.1.8	Must allow for "Notes" (see above) to include the following fields: Reason For Session (user defined drop down menu) Free entry text area field Results of Session (user defined drop down menu) Date of session, Date of Follow-up session		
12.21.1.9	Must allow for the ability to print counselor notes by student, filtered by reason for session (including ALL), Results Of Session (including all), and Date of Session (Date Range).		

12.21.1.10	Must allow for the ability of staff to view and print activities in which students participate by individual student.		
12.21.1.11	Must allow for Counselors to add "At Risk" Indicators - multiple selections		

12.21.2 Reports

#	**Requirement**	**Vendor Response**	**Required Explanation**
12.21.2.1	Must allow for the ability to create a report listing all students who meet graduation requirements based on user defined criteria.		
12.21.2.2	Must allow for the ability to create a report listing all students with duplicate credits, listing student name, State ID number, and course duplicates.		

12.22 Report Generator

#	**Requirement**	**Vendor Response**	**Required Explanation**
12.22.1.	Must allow for the ability to generate reports for both viewing on the screen and printing where the user can choose from DISPLAYED FIELDS to include in the report, field criteria to filter by that the user can choose from DISPLAYED FIELDS, and be able to choose from DISPLAYED FIELDS, the fields in the report by which the report should be sorted.		
12.22.2	Must allow for multiple column reports, multiple filtering criteria, and multiple sort criteria.		
12.22.3	Must allow for all student demographic data to be included in the report. This would include all fields		

	included in the student record described in Area 1.0 of this document, as well as grades, discipline, and attendance (period and daily).		
12.22.4	Must allow for report generator data output being in the form of a screen display (view), printed report, or text file output, in both comma delimited and tab delimited formats.		
12.22.5	Must allow user to save report criteria for future use and be able to share the saved reports to other users.		
12.22.6	Must not allow report processing to interfere with other users working on the system when possible.		
12.22.7	If report processing will be so intense as to significantly slow down other system activities in such a way that users are unable to work at their normal pace, the SAP must let users be able to schedule reports to be run during user specified off peak times.		

12.23 Summer School

#	**Requirement**	**Vendor Response**	**Required Explanation**
12.23.1	Must allow for the ability to submit a summer school term for transcript reporting.		
12.23.2	Must allow for the ability to select or enter students from another school or district when building a summer school roster.		

12.24 SAP Customization

#	**Requirement**	**Vendor Response**	**Required Explanation**
12.24.1	SAP must have the capability to allow the SAP		

	Administrator to customize all pages, all templates; and also have the capacity to create new fields and new pages for inclusion in the SAP, without programming support from the vendor, and at no additional programming cost. These customized fields and pages will be available for data aggregation and disaggregation, and for regular query. All of these customizations should continue to work with any updates provided by the vendor. These customizations will not void the support agreement between the vendor and the district. The SAP administrator must be able to make all customizations district wide.		
12.24.2	The SAP should have the following:		
12.24.3	Ability for users to add fields to multiple tables (not just student demographics table) within the database, with all field changes being made throughout the district to avoid problems with moving data from school to school.		
12.24.4	Ability to allow the user to report on all fields that have been added to the data model.		
12.24.5	Ability of the user to add new fields to existing screens within the SAP.		
12.24.6	Ability of the user to add new fields to new screens to be added to the package. New fields should include text, dropdown menus, check boxes, radio button, and other data input mechanisms.		
12.24.7	Ability for the user to build custom validation for specific form input data elements (i.e. Phone number field should be exactly ten numbers with no symbols or spaces).		

12.24.8	Ability for the user to build custom charts and graphs within the application.		
12.24.9	Ability for users to assign security privileges to new custom pages for specified groups of users.		
12.24.10	Ability for users to add or remove form entry data elements (fields) at the district level without any intervention required from the SAP programmers.		
12.24.11	Ability for users to add/edit/delete custom fields, custom pages, and other customizations at the district level, without any intervention required from the SAP programmers.		
12.24.12	Ability for users to create and share newly created pages and reports with others throughout the state that are using the same version of the SAP.		
12.24.13	Describe in detail how your package accomplishes the tasks listed in 12.24.3 – 12.24.12.		

12.25 Importing and Exporting Data

#	**Requirement**	**Vendor Response**	**Required Explanation**
12.25.1	Must allow end users to have the ability to easily define data import and export forms or templates that may be used to transfer data to and from external sources (other software programs) into the appropriate internal user-defined SAP software data fields.		
12.25.2	Must allow for the import and export processes, using the data import and export templates described in 25.1, must be capable of being scheduled and automated, making the data import and export processes automatic without need of human intervention once configured.		

12.25.3	Must allow for the creation of these import and export templates to be created through the user interface of the SAP, and should be simple in design without requiring any programming from the vendor, a third party, or the school districts, such that non-technical end-users may create the templates with only a minimal amount of training, and no additional costs to the district. Please describe how your package accomplishes this task.		
12.25.4	The SAP shall be built using a relational database, that can be accessed using third party reporting and data management tools, such as ODBC and JDBC, and can be queried using SQL queries. The database will be so configured that district technical personnel will have at least read only access to the data for use with the tools described above.		
12.25.5	The database shall also have data views to facilitate data extraction in easily usable form.		
12.25.6	The SAP must include the ability to manually import and export data. The manual import process must include import mapping that will evaluate the data being imported and auto-map to the corresponding field locations in the SAP database.		

12.26 Building Information

#	**Requirement**	**Vendor Response**	**Required Explanation**
12.26.1	Must allow for entry of District/School Demographic information elements listed below: **District Level:**		

	DISTRICT_NUMBER SHORT_NAME ADDRESS1 ADDRESS2 CITY STATE ZIP ZIP_4 TEL_AREA_CODE FAX_AREA_CODE FAX_NUMBER ADMIN_NAME ADMIN_EMAIL GRADE_CATEGORY_7TH GRADE_CATEGORY_8TH SST_SCHOOL_STATUS_CODE CTY_COUNTY_NUMBER RTE_RECORD_TYPE NAME TEL_NUMBER NCES_NUMBER BASE_VALUE_IND INACTIVE_IND EFFECTIVE_DATE MADDRESS1 MADDRESS2 MCITY MSTATE MZIP MZIP_4 CONTACT_NAME		

	CONTACT_EMAIL CREATE_USER CREATE_DATE MODIFY_USER MODIFY_DATE VOCED_FAC ENTER_STU_COUNT_IND SAP SEC_CONTACT_NAME SEC_CONTACT_EMAIL CONTACT_PHONE SEC_CONTACT_PHONE ENROLLMENT_GROUP BUILDING HEATED UNHEATED TOTAL_SQUARE_FEET **School Level:** SCHOOL_NUMBER NAME SHORT_NAME NCES_NUMBER ADDRESS1 ADDRESS2 CITY STATE ZIP ZIP_4 AREA_CODE TELEPHONE_NUMBER		

	FAX_AREA_CODE FAX_NUMBER ADMIN_EMAIL ADMIN_NAME TITLE_I_IND TARGETED_TITLE_I_IND MAGNET_SCHOOL_IND CHARTER_SCHOOL_IND PROVISIONAL_SCHOOL_IND LOCATION_CODE DIST_DISTRICT_NUMBER SST_SCHOOL_STATUS_CODE CTY_COUNTY_NUMBER GSE_GRADE_SCALE_TYPE STC_SCHEDULE_TYPE_CODE SCH_CODE MADDRESS1 MADDRESS2 MCITY MSTATE MZIP MZIP_4 CONTACT_NAME CONTACT_EMAIL CONTACT_PHONE INACTIVE_IND EFFECTIVE_DATE CREATE_USER CREATE_DATE MODIFY_USER MODIFY_DATE		

	ROLL_DATA_IND ROLL_SCHED_IND TO_SCHOOL_YEAR START_TIME END_TIME BUILDING HEATED UNHEATED TOTAL_SQUARE_FEET		

13. Data Warehouse Requirements (Phase III)

The Vendor will be responsible for reviewing the department's catalog of data files, data dictionary and metadata that have been compiled. The Vendor shall meet with State Project Team and Information Technology staff to gain a clear understanding of the current status of the department data and provide recommendations for the direction of the data warehouse. The Vendor will be responsible for all aspects of the Project, including, but not limited to the following high-level requirements:

13.1 The Vendor shall prepare and submit analysis and design documents for the ETL, Data Warehouse and Decision Support System for Department approval.

13.2 The Vendor must propose and implement an automated extraction, transformation and loading (ETL) tool and processes to move data from the disparate data sources to the data warehouse. The Vendor will work with appropriate personnel from the DOE to develop and test the ETL system. This component shall include the following minimum requirements:

13.2.1 Ability to transfer data to and from heterogeneous data sources and targets;

13.2.2 Capability to have data-cleansing functionality;

13.2.3 Seamless integration with the data warehouse; and

13.2.4 Smart updates - loading and/or updating only the records that have been added or updated since the last iteration (preferred).

13.3 The Vendor must provide all services, software configuration and development associated with the design, architecture and implementation of a comprehensive data warehouse. This component shall include the following minimum requirements:

13.3.1 Provide the capacity to store 20 years of student unit records and related data;

13.3.2 Maintain data in one repository;

13.3.3 Ability to longitudinally combine older aggregate data with newer detailed unit record data;

13.3.4 Be constructed using industry standards for data warehouse development and data modeling techniques; and

13.3.5 The creation, implementation and documentation of a thorough testing approach and plan for ensuring data quality.

13.4 Decision Support System

13.4.1 Vendor will be responsible for the installation and integration of a decision support system that will allow end users to perform analysis and forecasting.

13.4.2 The decision support system shall incorporate query tools, reporting tools, and on line analytical processing (OLAP) with a user-friendly interface. At a minimum, the reporting tools shall include the capabilities to generate queries, reports, graphs, spreadsheets, and file extracts.

13.4.3 The system shall contain an integrated ad-hoc report generation capability that enables authorized users to create, save, share and print custom reports. Required capabilities include but are not limited to the following:

13.4.3.1 Features that allow MDE Staff to summarize information and to conduct in-depth analyses of student performance in user-friendly formats;

13.4.3.2 Drill-down and roll-up features that allow state staff to see the data at different levels of detail and include multi-dimensional features that allow users to select specific data for retrieval or for further exploration, data mining and analysis;

13.4.3.3 Provide options that allow the user to select a choice of output—report, chart, graph, export to file (.xls, .csv, .text, .tab);

13.4.3.4 Comply with state and federal laws and statutes that protect the confidentiality of student and staff information (example – option to suppress cells (not report) where appropriate to ensure that individual students are not personally identifiable. This includes student counts and percents.);

13.4.3.5 Standard and ad hoc reporting capabilities to meet Federal and State reporting requirements including but not limited to EDFacts, and CSPR;

13.4.3.6 Provide easy navigation for casual users and sophisticated users; and

13.4.3.7 Provide on-line documentation with help features for all users.

13.5 Internet Access/Website

13.5.1 The decision support system must be accessible via the Internet and must provide the MDE staff, and in the future, school districts and the general public access to appropriate education data, reports and decision support tools through a flexible and intuitive web interface;

13.5.2 Access authentication and authorization must be provide as follows:

13.5.2.1 Login requirements: No Login required for public access. Login for MDE staff and school district staff required and must interface with the new proposed system;

13.5.2.2 System Access requirements: The implementation of multi-tiers or levels of users (i.e. MDE staff, Superintendent, teachers, public, etc.); and

13.5.2.3 Industry standards for web development must be employed.

13.6 System Administration

13.6.1 Must have online reporting of data warehouse and end-user activities;

13.6.2 Must have the capacity to monitor refreshment of data within the data warehouse; and

13.6.3 Must have tools for performance management.

13.7 Security

13.7.1 The proposed Solution must prohibit the disclosure of personally identifiable information to any unauthorized person. All personally identifiable information must be transferred securely to and from educational entities over the Internet or network infrastructure.

13.7.2 The proposed Solution must implement security to ensure that the information in the data warehouse is protected against unauthorized disclosure, transfer, modification, or destruction, whether accidental or intentional.

13.7.3 The data warehouse Solution must have the ability to use SSL 128-bit encryption or equally robust or a greater industry accepted standard for data in transit and data at rest.

13.7.4 The proposed Solution must provide the ability to mask the State Assigned Student ID number and the Teacher ID number.

13.7.5 The security Solution must also comply with FERPA and HIPPA privacy and security standards.

13.7.6 Must support multiple levels of authorized access by aggregation level and element value (e.g. principal authorizes detailed access for his/her school only).

13.7.7 The Vendor must provide documentation to facilitate knowledge transfer. End-user, design, code, maintenance, and administration documentation must be provided.

13.8 Training

13.8.1 The Vendor shall work closely with the State Project Team to provide training and support so that the State Project Team will be sufficiently prepared to continue with future expansion, daily operation and maintenance of the data warehouse. Knowledge transfer must be provided for each component of the solution.

13.8.2 Training must be provided for Department developers and ad hoc users of the decision support system. Training must include instruction on how the decision support system can be used to gain information and knowledge through analysis and display of data within the warehouse.

13.9 Vendor will be responsible for testing and performance tuning. This will include measuring the system level metrics critical for the development of the applications infrastructure and operation of the applications in the production environment. It also includes the measurement of response rates of the application for end-user transactions and resource utilization (of various servers and network) under various load conditions. These response rates shall be used as a basis for changes and retesting until optimum system performance is achieved.

14. Project Management Requirements

14.1 Project Manager/Project Team Responsibilities

14.1.1 The Vendor will be responsible, in coordination with the State Project Manager, for performing analysis, design, customization and/or development, integration and implementation with MDE approval points throughout the life of the project.

14.1.2 The Vendor must furnish and maintain all software, databases, and interfaces as necessary to deploy the system as defined herein.

14.1.3 Vendor must provide an on-site project manager to facilitate the project and manage the Vendor project team through all aspects of the analysis, design, development, and testing of the customization for the implementation of the proposed solution. Project management activities will include, but will not be limited to:

14.1.3.1 Establishing and administering controls to ensure the quality of deliverables are acceptable to MDE;

14.1.3.2 Developing and maintaining a detailed work plan and schedule in conjunction with MDE;

14.1.3.3 Monitoring project activities to ensure project schedules are met; and

14.1.3.4 Providing weekly and/or monthly status reports including the following:

14.1.3.5 Recap of the previous period's work;

14.1.3.6 Preview next period's tasks;

14.1.3.7 Status of major activities/milestones;

14.1.3.8 Any potential delays in reaching target dates and supporting information about the delays;

14.1.3.9 Any proposed revisions to the overall work schedule;

14.1.3.10 Presenting weekly reports orally when requested and written monthly reports; and

14.1.3.11 Facilitating and escalating any problems or issues that arise during the project

14.1.4 The Vendor must describe the issue resolution escalation process that will be used within the Vendor's organization to resolve any problems or issues that may arise during the course of the project.

14.1.5 The Vendor's Project Manager will work with the State Project Manager, during project initiation, to set standards for all aspects of the project (e.g., time of the regularly scheduled project meetings, project communication, information to be included, and the format of the written status reports, etc.).

14.1.6 Vendor must facilitate discussions with the project team, utilizing industry best practices, to determine the best course of action for incorporating the changes necessary for implementing the proposed solution. Vendor must document the agreed upon course of action.

14.1.7 The Vendor must fully discuss the approach planned for this project including outlining all issues identified as pertinent to this undertaking as well as defining a methodology for producing the desired results. For each issue identified, the Vendor must detail key elements of the problem task(s) and the manner in which a resolution will be approached.

14.1.8 Vendor must prepare a customization design document(s) to be validated by the MDE prior to the actual customization.

14.1.9 Vendor must facilitate an iterative review process of the customization design document until Vendor receives sign-off by MDE.

14.1.10 Vendor must work with the State project team to define all data entities associated with the data collection process and how those entities map to the proposed application.

14.1.11 Vendor must define the approach to defining all data entities necessary for a successful implementation of the proposed system.

14.1.12 The State project team must be allowed to participate in and provide input on decisions regarding:

14.1.12.1 The determination of which data fields are required, and those that are not required;

14.1.12.2 Participation in the definition of the values and/or data with which the drop-down lists will be populated; and

14.1.12.3 Participation with decisions regarding the creation of and/or changes to windows/screens of the proposed solution for the MDE.

14.2 Project Work Plan

14.2.1 The Vendor must submit an initial Project Work Plan including activities, tasks, proposed personnel, estimated hours for each task, timeframes for each project task, assigned resources by name and/or title, major project milestones, quality assurance checkpoints, and all scheduled deliverables with targeted start and end dates.

14.2.1.1 Vendor should make any assumptions necessary to create Project Work plan and document all assumptions made.

14.2.1.2 Vendor must clearly define State resource requirements and the skill levels required for each specified State resource. This work plan should include all phases of implementation (data conversion, installation, testing, and go-live). This work plan should specify tasks in terms of months, weeks, or days from contract signing.

14.2.1.3 Upon project award, the Vendor and MDE will jointly modify the generic plan to develop a mutually agreed upon project work plan.

14.2.1.4 The State expects the Vendor to work with the State Project Manager to ensure effective project management during all phases.

14.2.1.5 The Project Work Plan must allow reasonable time for the State to review and approve task completion deliverables, without interrupting the Vendor's continuing progress toward completion of the project. A minimum of 10 business days will be required for the State to the review and approve each deliverable.

14.2.1.6 The project work plans must be structured so as to minimize disruption and interference with the State's daily operations.

14.2.1.7 All work plans, project plans, and schedules must be produced in Microsoft Project.

14.2.1.8 Awarded Vendor must prepare and submit to MDE, as the first deliverable of the project, a final work plan and project schedule for review and approval. This plan is due no later than fourteen (14) calendar days after contract execution.

14.2.1.9 Awarded Vendor is responsible for maintaining/updating the "official, approved" work plan for the project. Each time the project work plan is updated, Vendor must submit to State for review and approval

14.3 Integration Services

14.3.1 The Vendor's proposal must include the analysis, design, development, testing, and implementation services for all interfaces necessary for the successful implementation of the proposed solution.

14.3.2 The interfaces referenced above may be those defined within these requirements, as well as those identified during the analysis phase of the project.

14.4 Implementation/Customization

14.4.1 Vendor must provide implementation services for a turnkey software solution and include pricing for these services in the Cost Information Summary Form (Section VIII).

14.4.2 Vendor must provide customization services if software must be modified to accommodate MDE's business needs. The cost for any customization should be detailed in the Cost Information Summary Form (Section VIII).

14.4.3 Vendor must provide to MDE all components for any customization performed throughout the duration of the PROPOSED SYSTEM implementation. This includes, but is not limited to:

14.4.3.1 Code for the customizations;

14.4.3.2 Documentation explaining how the customization works as well as any change in base functionality resulting from implementation of the customization;

14.4.3.3 All parts required to compile code or generate scripts;

14.4.3.4 All developed scripts, configuration parameters, and any other components required to utilize and support the entire system including customization; and

14.4.3.5 Knowledge transfer/training to allow MDE sufficient knowledge to support customizations.

14.5 Conversion/Data Migration Services

14.5.1 Vendor must provide services to assist MDE in the conversion of data from existing systems and include pricing for these services in the Cost Information Summary Form (Section VIII).

14.5.2 Vendor agrees that all data converted and entered into the system either before or after go-live is solely owned by the State.

14.5.3 Vendor must specify the number of successful system conversions the Vendor has completed.

14.5.4 The Vendor must perform any analysis necessary to assess the need for conversion of any data from the system(s) currently in use into the proposed solution. It is anticipated that the conversion will include all data currently maintained in the Mississippi Student Information System, Local School Administration Packages as well as other information identified during the analysis. Examples of data formats to be converted are ASCII files housed on the mainframe, information maintained in an Oracle database, or Excel spreadsheets.

14.5.5 Vendor must work with the State to develop and implement a plan for data conversion for the proposed solution.

14.5.5.1 The resulting Conversion/Data Migration Plan shall clearly identify in detail the responsibility of the Vendor and the State in regards to all steps, tasks, activities, events, milestones and resources necessary for the conversion/data migration process.

14.5.5.2 The Conversion/Data Migration Plan must include all roles, responsibilities, and time frames.

14.5.5.3 The Conversion/Data Migration Plan must document data mapping (i.e., how the existing data will map to the new data) and include a data dictionary.

14.5.6 Vendor shall provide conversion services including, but not limited to, establishing a conversion plan including techniques and associated tools used to track, document, and manage conversion issues.

14.5.7 After analysis, Vendor must identify all static data needed in the database for a successful implementation that is not available electronically in the State's system and/or via other interfaces. Vendor must provide an hourly rate for data entry services to enter the identified data. Utilizing these data entry services is at the sole discretion of the State.

14.5.8 Vendor shall perform quality assurance tasks to verify the data has been converted correctly and that the processes accessing the converted data function as specified when the proposed solution is fully operational.

14.5.9 Vendor must identify the need for any value translation tables to perform data conversion(s).

14.5.10 Vendor must provide the conversion methodology used to ensure all data was converted (e.g., hash totals, etc.).

14.5.11 Vendor must provide record layout(s) for import files necessary for successful conversion.

14.5.12 Vendor must perform any import tasks associated with converting the data from the file provided by the State, including any data manipulation, to ensure the successful population of all data elements associated with the data provided (The State will be responsible for exporting the data from the current applications used into the file format specified by the Vendor. The file provided by the State will be in the format specified by the Vendor).

14.5.13 The Vendor must, with assistance from the State, verify the data conversion into the New Proposed SIS was accomplished successfully in that the loaded data populated the correct tables,

appropriate fields, etc., and that the data information is intact in the New Proposed SIS

14.6 Acceptance Testing

The purpose and net result of the acceptance test is to determine that the system proposed, designed, customized, and installed meets the technical and functional requirements outlined in these specifications. A system considered "acceptance test ready" is defined as a system that has completed a full system test with no known outstanding material defects.

14.6.1 Vendor must conduct an operational system test of the proposed system and certify, in writing, that the system is ready for acceptance testing and will perform in accordance with requirements stated in this document. The Vendor must ensure that the system in general and each module of the system in particular operate according to specifications before turning the system over to MDE. MDE personnel will not debug modifications for the Vendor.

14.6.2 The Vendor must provide a proposed "Acceptance Test Plan" (ATP) prior to acceptance testing of the system by the State. The ATP must show events, sequences, and schedules required for acceptance of the system. MDE must provide written approval that the proposed ATP is complete and acceptable prior to the beginning of the acceptance testing. The ATP is considered a task completion deliverable. The format of the test plan will be decided upon jointly by MDE and the proposed project team.

14.6.3 Vendor must provide all documentation, as defined in this RFP under Documentation Requirements, for the module(s) being tested before acceptance testing will begin. Acceptance of the documentation will depend on the ability to utilize the information in the application including, but not limited to, system administration and data recovery. If the State determines the documentation to be insufficient, the Vendor must provide within 10 business days and at his own expense, whatever updates may be required to resolve documentation deficiencies.

14.6.4 Vendor must provide system and user training to the acceptance test team prior to the initiation of the acceptance test period.

14.6.5 The State will conduct acceptance testing of the system after system testing has been completed and certified in writing by the Vendor. The Vendor must participate in the acceptance testing of

the system by providing technical staff on site for assistance in demonstrating the functions of the system. The State must demonstrate that the system is operational to ensure that proper training has been received and sufficient knowledge transfer has been accomplished.

14.6.6 The Vendor must agree to and allow for a final acceptance testing period of up to 30 business days in accordance with the work plan delivery schedule.

14.6.7 As a component of acceptance testing, the State will assess the sufficiency of the system and user training curriculum. In the event that any training curriculum is not accepted based on knowledge gained during acceptance testing, the Vendor must resolve the deficiency within 10 business days and at his own expense. The curriculum must be accepted prior to the execution of any training for implementation.

14.6.8 The Vendor may propose a phased testing approach if some modules are ready for use before others. Regardless of the strategy employed, the complete application system will undergo the full 30 business day acceptance testing by the State once all modules are complete/customized and ready for final implementation.

14.6.9 The State will communicate to the Vendor any deficiencies identified during testing. These deficiencies must be corrected and tested by the Vendor before submitting the corrections to the State for regression testing.

14.6.10 Acceptance testing is complete when the State has successfully completed all acceptance test criteria defined in the ATP, as well as other ad hoc testing as defined by the State; all critical defects have been corrected and successfully re-tested by the State; and the State has been able to emulate 10 consecutive successful iterations of processing cycles, as defined by the State, without error. These completion criteria are independent of the 30 business day test period.

14.6.11 In addition to the 30 business day acceptance test period, the State will facilitate a 3 month pilot period that will include selected school districts located in various parts of the State of Mississippi. The State will require specific on-site support from the Vendor for the “pilot period.” On-site in this context is to mean Jackson, Mississippi.

14.6.12 The Vendor must correct any deficiencies identified during the pilot period. The Vendor must test the corrected deficiencies before submitting them to the State for regression testing.

14.6.13 Acceptance testing shall not in any way relieve the Vendor of his responsibilities to correct any defect identified during the warranty period as described in Item 8.24 of this Section.

14.6.14 In the event that one or more modules is not accepted based on the test criteria, the Vendor must, at his own expense, provide software or modifications that may be required to meet the acceptance criteria within 10 business days.

14.6.15 The State reserves the right to reject the system after the third unsuccessful test of any module of the system

14.7 Documentation Services

14.7.1 Vendor must provide "cheat sheets" on the basic functionality of the application for user training.

14.7.2 Vendor must provide "end-user" and technical documentation on each module of the proposed solution.

14.7.3 Vendor must provide all software and documentation on electronic media (CD ROM). Data provided on CD ROM should be searchable. Both user and systems administration documentation must be provided (e.g., Systems Administration Documentation, Systems Operations Documentation, and User Documentation).

14.7.4 All documentation must be customized and must address the proposed solution as it pertains to the needs of the State of Mississippi.

14.7.5 Documentation must be provided in Microsoft Office format and/or in a format that is web accessible.

14.7.6 Vendor must provide, at no additional cost, any documentation updates needed for the successful operation of the solution for any system changes, upgrades, enhancements, new releases, or customizations to the software. Vendor must specify how such updates and documentation will be distributed to the State.

14.7.7 Vendor must provide technical documentation that includes installation, configuration, and administration for the application

and all components. The acceptance of this documentation will be based on the ability of the State to utilize it to duplicate the entire application in another environment.

14.7.8 Vendor must include disaster recovery documentation in the technical documentation.

14.7.9 Entity relationship diagrams should be included in system documentation.

14.7.10 The State must be allowed to reproduce, as needed, any documentation provided (including electronic or printed form). This reproduction of documentation will be for the sole purpose of this project.

14.7.11 Vendor must provide documentation on how to restore the database in the event of hardware or software failures, as well as human error.

14.7.12 Vendor must provide documentation on how to archive records based upon pre-defined time period.

14.7.13 Vendor must provide documentation on how to restore records that have been archived.

14.7.14 The Vendor must provide documentation of all functionality and dependencies in the application that will aid in the recovery of all or any part of the application.

14.7.15 Design Documents

14.7.15.1 Logical Design

14.7.15.1.1 The Vendor must produce a logical design diagram that documents the conceptual design of the system including hardware, software, data transmissions, user privileges, etc.

14.7.15.1.2 The Vendor must produce a logical process flowchart that depicts screen navigations and business processes.

14.7.15.2 Physical Design

14.7.15.2.1 The Vendor must produce a physical design diagram that documents the technical environment of the proposed solution.

14.7.15.2.2 This document will include hardware configurations, software and hardware manufacturers, software configurations, communications configurations, diagram of data flow of application, data dictionary, and technical documentation of user interface(s).

14.8 Disaster Recovery

14.8.1 Vendor must provide a disaster recovery plan for the proposed solution including, but not limited to, all recovery features and how the database is restored in the event of hardware or software failures or errors caused by human error.

14.8.2 Vendor should be aware the disaster recovery plan for the proposed solution will be integrated into the MDE Disaster Recovery Plan. Vendor must be prepared to provide support and technical expertise to the State on all aspects of the proposed solution during this integration process

15. **Training**

15.1 Vendor must work with the State to develop and implement a training plan for the proposed solution.

15.1.1 The resulting Training Plan shall clearly identify the users and systems administrators that need training, the topics to be discussed, and the time required to complete training.

15.1.2 Vendor should include in their proposal sample training plan(s) that have been successfully used in previous project(s).

15.2 Vendor must provide all training required for the successful operation and internal support of the proposed solution.

15.2.1 All training must be customized and address the proposed solution as it pertains to the needs of the State of Mississippi.

15.2.2 The Vendor must provide separate detailed cost information in Section VIII for different types of training requested and/or required.

15.2.3 The Vendor must provide on-site training sessions for up to 35 internal users. All internal users may not require training on all modules of the application.

15.2.4 The Vendor must provide an on-site train-the-trainer training session for up to 35 internal users. The focus in this training session should be on how to train district personnel and other internal MDE users.

15.2.5 The Vendor must provide on-site training on the query/report writing functionality for up to 35 users.

15.2.6 The Vendor must provide a training curriculum for future use by the State's trainers.

15.2.7 The Vendor must provide on-site technical support staff/System Administrator training for up to 20 technical/System Administrator users. Training must include, at a minimum: how to create additional customization; how to create business rules, triggers and/or alarms; how to archive records and retrieve records from archive; system security; configuration and administration of system tables and parameters; and training on any additional software necessary for successful implementation and support of the proposed solution.

15.2.8 Training must include media based, hands-on experience, and instructor-led delivery modes.

15.2.9 Training must be provided on-site at a facility provided by the State in Jackson, Mississippi.

15.3 The Vendor must provide any and all training materials and documentation necessary for the successful delivery of the training sessions.

15.4 All training materials and documentation are considered a deliverable and must be submitted to the State with adequate time for the State to review and approve all such material prior to the beginning of the actual training.

15.5 The Vendor must provide all training materials and documentation on electronic media (CD ROM). Data provided on CD ROM should be searchable.

15.6 The State must be allowed to reproduce and/or edit, as needed, any training materials provided, including electronic or printed form. This reproduction of training materials will be for the sole purpose of this project.

15.7 The State will determine when training is sufficient for successful operations. If the initial training session is insufficient and the State determines that additional training is needed, the Vendor will be required to provide such additional training at no additional cost to the State.

15.8 If there are system changes, upgrades, enhancements, new releases, or customizations to the software that require additional training, Vendor shall provide the additional training needed for the successful operation of the software.

15.9 The Vendor must include in the Cost Information Summary a separate line item cost for each type of training identified.

15.10 At the request of the State, Vendor shall provide additional training sessions. The cost for such additional sessions should be outlined as an hourly rate and a per session rate in the cost information summary.

15.11 The Vendor shall identify the maximum number of students per class for these additional training sessions.

15.12 The Vendor must include in the proposal submitted a description of the training provided for new releases or upgrades to the system.

16. Warranty/Maintenance

16.1 Warranty

16.1.1 The warranty period involves a one-year period during which the Vendor must warrant that the system performs as stated in the RFP and Vendor's proposal at no cost to the State. The warranty period must include the necessary Vendor support to correct any system deficiencies found and to provide any other system consultation as needed.

16.1.2 The warranty period will not begin until the system is fully implemented and accepted by MDE.

16.1.3 The Vendor must agree to warrant any and all application software proposed to be free of errors for a minimum period of one year after acceptance of such software. During this period, the Vendor will agree to correct any errors discovered at his own expense. If

the system fails during warranty due to a defect, the Vendor will offer a workaround solution within 24 hours and a full fix within five business days.

16.1.4 The Vendor must state and discuss the full warranty offered during the warranty period on all system software proposed and state if it is longer than the minimum.

16.1.5 This warranty must cover all components of the system, including all programs, screens, reports, subroutines, utilities, file structures, documentation, interfaces, conversions, or other items provided by the Vendor. This warranty will apply to the base package, plus any customized programs, screens, reports, subroutines, interfaces, conversions, utilities, file structures, documentation, or other items proposed and delivered by the Vendor specifically for this acquisition.

16.1.6 The Vendor must agree that all corrections made during the warranty period will be considered an integral part of the proposed system and will be available to MDE under the normal license agreement at no additional charge.

16.1.7 Warranty coverage must also include provision for enhancements, fixes, and upgrades provided as part of Vendor's standard license/maintenance agreement free of charge. Vendor must acknowledge the inclusion of all required warranty features.

16.1.8 The Vendor must express the Vendor's responsibility to perform immediate high priority attention to any corrections needed. The statement must include that errors will be identified in MDE's sole judgment and that after 10 working days without correction, MDE shall have the right to return all of the Vendor's products and be refunded any monies paid to date and terminate this agreement.

16.2 Support and Maintenance Services

16.2.1 The Vendor must specify costs and details for providing annual application maintenance and support beyond the warranty period for the balance of the 5-year lifecycle for the project (i.e., the warranty period would be year one (1) plus four (4) years of maintenance and support

16.2.2 The State expects this maintenance and support service to include all application software upgrades and patches. The Vendor must

specify how upgrades and patches are obtained and how the state will receive notification of upgrades.

16.2.3 The Vendor must describe the process and tasks associated with post implementation installation of upgrades and/or patches. Vendor must include steps regarding software customization and how it is affected when upgrades and/or patches are installed.

16.2.4 The Vendor must provide support necessary to assist the State with installation of enhancements, fixes, and upgrades.

16.2.5 At the time of availability of any enhancement, fix, or upgrade, the Vendor must provide the State with an outline of all modules and/or customization that may be affected.

16.2.6 The Vendor must describe how user customization of the application affects the warranty and maintenance/support of the product(s).

16.2.7 The Vendor must provide support necessary to assist the State with recovering from a crash or down time situation.

16.2.8 The Vendor must identify all scheduled maintenance requirements including a description of all daily, weekly, monthly, and annual tasks.

16.2.9 The Vendor must fully describe other features offered by the proposed maintenance/support plan.

16.2.10 The Vendor must specify the annual support and maintenance increase ceiling to which the Vendor is willing to agree. Price escalations, if any, for annual support and maintenance coverage will be permitted, but shall not exceed the lesser of a 5% increase or an increase consistent with the percent increase in the consumer price index, all Urban Consumer US City Average (C.P.I. –u) for the preceding year.

16.2.11 The Vendor must provide a toll free number for technical support/help desk during normal operating hours. Operating hours are 7:00 AM to 7:00 PM Central Time Monday through Friday. The Vendor technical support/help desk would be utilized by the MDE staff only.

16.2.12 The Vendor must provide one-hour telephone response.

16.2.13 The Vendor is required to keep a log of all support calls made by MDE staff and to provide this log to MDE with the current status of open issues, as well as documented solutions to closed issues upon demand.

16.2.14 The State prefers that the Vendor also provide on-line web support.

16.2.15 The Vendor must agree to send support usage statements to the State upon request.

16.2.16 The Vendor must identify, in his proposal, the nearest service dispatch point if software problems cannot be fixed over the phone.

16.2.17 The Vendor should include in the proposal submitted, a statement of intent to support the software for a period of 10 years.

16.2.18 The Vendor must provide support for any customizations performed for clients.

16.2.19 The Vendor must guarantee that customizations will not limit, restrict, or adversely impact product upgrades for the 5-year lifecycle of this project.

16.2.20 The Vendor must provide system tools to diagnose and troubleshoot the database. These tools should be on-line and non-disruptive.

16.2.21 The Vendor must include in the proposal, a list of help desk applications with which the proposed solution is compatible

16.2.22 At the request of the State, the Vendor should provide on-site support as needed. The Vendor shall be responsive and timely to maintenance/technical support calls/inquiries made by MDE. MDE reserves the right to determine and assign levels of severity for the issue/support problems. The severity of the issue/support problems shall determine the *average problem resolution response time* in any calendar month of the contract as follows:

16.2.22.1 <u>Severity Level 1</u> shall be defined as urgent situations, when the State's production system is down and the State is unable to use the proposed system; the contractor's technical support staff shall accept the State's call for assistance at the time the State places the initial call; however, if such staff is not immediately

available, the contractor shall return the State's call within one (1) business hour. The contractor shall resolve Severity Level 1 problems as quickly as possible which, on average, shall not exceed two (2) business days, unless otherwise authorized in writing by the State.

16.2.22.2 Severity Level 2 shall be defined as a critical software system component(s) that has significant outages and/or failure precluding its successful operation, and possibly endangering the State's environment. The proposed system may operate but is severely restricted (e.g., a frequently used functionality gives an incorrect response.) The contractor's technical support staff shall accept the State's call for assistance at the time the State places the initial call; however, if such staff is not immediately available, the contractor shall return the State's call within two (2) business hours. The contractor shall resolve Severity Level 2 problems as quickly as possible which, on average, shall not exceed three (3) business days, unless otherwise authorized in writing by the State.

16.2.22.3 Severity Level 3 shall be defined as a minor problem that exists with the proposed solutions but the majority of the functions are still usable and some circumvention may be required to provide service (e.g., an infrequently used functionality gives an incorrect response.) The contractor's technical support staff shall accept the State's call for assistance at the time the State places the initial call; however, if such staff is not immediately available, the contractor shall return the State's call on average within three (3) business hours. The contractor shall resolve Severity Level 3 problems as quickly as possible which, on average, shall not exceed ten (10) business days, unless otherwise authorized in writing by the State.

16.2.22.4 Severity Level 4 shall be defined as a very minor problem or question that does not affect the proposed systems' function (e.g., the text of a message is worded poorly or misspelled.) The contractor's technical support staff shall accept the State's call for assistance at the time the State places the initial call; however, if such

staff is not immediately available, the contractor shall return the State's call within four (4) business hours. The contractor shall resolve Severity Level 4 problems as quickly as possible which, on average, shall not exceed 15 business days, unless otherwise authorized in writing by the State.

16.2.22.5 General Assistance: For general software support/help desk calls not covered by the above severity level descriptions, the contractor's technical support staff shall accept the State's call for assistance at the time the State places the initial call; however, if such staff is not immediately available, the contractor shall return the State's call within five (5) business hours.

16.2.23 In the event of a delay as described herein, Vendor shall pay the State, within 5 calendar days from the date of receipt of notice, fixed and liquidated damages of $250.00 per day for each calendar day of delay caused by the Vendor. Additional specifications concerning liquidated damages may be found in Article 45 of the contract

17. Additional Requirements

17.1 The Vendor must explain how the proposed application interfaces with electronic signature functionality.

18. Location of Work

18.1 MDE requires the Vendor to have staff on-site during various stages of the project including, but not limited to, gap analysis, business process analysis, design, configuration/implementation, training, technical knowledge transfer, and system go-live. The Vendor must fully discuss the approach and percentage of commitment of staff and time on-site versus off-site for the duration of this project.

18.2 For work being performed on site in Jackson, the State will provide limited office workspace and communications necessary for implementation on MDE's infrastructure. On site work must be performed during normal MDE business hours, 8:00 AM until 5:00 PM Central Time, Monday through Friday. The Vendor is expected to provide equipment for the staff assigned (laptop or desktop configured with a 10/100 Ethernet card that will allow connectivity with MDE's network) with the necessary hardware for implementation.

19. Change Order Rate

19.1 Vendor must provide a fully loaded hourly change order rate in the Cost Information Summary Form, (Section VIII) for any modifications that may be deemed necessary or desirable by MDE.

19.2 For all Change Orders, the Contractor shall be compensated based on the rate for the appropriate level of personnel/expertise required by the Change Order. Vendor must provide only a "fully loaded" hourly rates for the following levels of personnel/expertise:

19.2.1 Project Manager;

19.2.2 Data Base Administrator;

19.2.3 Network Administrator;

19.2.4 Technical Team Leader;

19.2.5 Functional Team Leader;

19.2.6 Technical Analyst;

19.2.7 Functional Analyst;

19.2.8 Document Specialist; and

19.2.9 Training Specialist.

20. Value-Add

20.1 The Vendor is requested to provide details on what features, functions, or other considerations exclusive of the specific requirements either his company or the proposed solution afford the State that may provide a distinct value to MDE.

20.2 In the event that the State agrees such features, functions, and other considerations do provide a distinct benefit, the State reserves the right to give the Vendor additional consideration. The State shall make the sole assessment of the relative merits of each added value proposal to the agency.

21. Cost Proposal and Payment Terms

21.1 The Vendor must submit a total fixed dollar cost for all services and products requested in this RFP. One-time and recurring costs for installation and licensing of software, interfaces, training of staff, software modifications,

customizations, programming, and other costs shall be enumerated item by item and a total price quoted for the entire project.

21.2 The Vendor should be aware that payments for this project will be made on a deliverables-based schedule, upon State acceptance of the agreed upon deliverables/milestones. The State requires that deliverables be tied to significant project milestones.

21.3 The Vendor must provide detailed cost information for all software and service components, data conversion costs, implementation costs, and training costs proposed in response to this RFP. All on-site visits for any of these services should include any travel, lodging, and per diem related expenses.

21.4 While it is the State's intent to acquire a total solution, total cost and available funding may only allow for the acquisition of necessary modules now and the purchase of remaining modules at a later date. Vendor's proposal must include the length of time for which the component pricing is guaranteed.

21.5 If pricing options other than perpetual licenses (hosted, ASP models) are offered by the Vendor, these options must be clearly defined in the Cost Information Summary Form (Section VIII). The Vendor may quote multiple cost options as long as they are clearly outlined in the Cost Information Summary Form (Section VIII).

21.6 The Vendor must provide all cost information for a 5-year life cycle.

21.7 The Vendor must agree that any additional user licenses, as may be required by the State in the two years following system acceptance, may be purchased at the rate listed in the cost proposal, or at the then current price, whichever is less.

21.8 The Vendor must itemize any and all third party software costs including platform systems in the cost proposal.

21.9 The State will entertain a progressive implementation plan whereby the contractor may deliver completed portions of the system and be remunerated for the costs of that deliverable. In such cases the State will make progress payments for all accepted deliverables subject to a 15% retainage that will be held and paid only upon final acceptance of the system.

21.10 Freight must be specified as FOB destination. All required costs, including freight and insurance as necessary, must be specified.

21.11 The Vendors must provide the discounted price for each line item.

22. Scoring Methodology

22.1 ITS will use any or all of the following categories in developing a scoring mechanism for this RFP prior to receipt of proposals. All information provided by the Vendors, as well as any other information available to evaluation team, will be used to evaluate the proposals.

22.1.1 Cost

22.1.2 Vendor Qualifications

22.1.3 Technical/Functional requirements

22.1.4 Project Management

22.1.5 Warranty/Maintenance and Training

22.1.6 Value-Add

22.2 Each category included in the scoring mechanism is assigned a weight between one and 100. The sum of all categories, other than Value-Add, will equal 100 possible points. Value-Add is defined as product(s) or service(s), exclusive of the stated functional and technical requirements and provided to the State at no additional charge, which, in the sole judgment of the State, provide both benefit and value to the State significant enough to distinguish the proposal and merit the award of additional points. A Value-Add rating between 0 and 5 may be assigned based on the assessment of the evaluation team. These points will be added to the total score.

22.3 Proposals meeting less than 80% of RFP requirements (exclusive of evaluation points for cost and added value) may be eliminated from further consideration.

22.4 On-site Demonstrations and Interviews - If requested, Vendors must be prepared to make on-site demonstrations of system functionality and/or proposal clarifications to the evaluation team and its affiliates within seven calendar days of notification. Each presentation must be made by the project manager being proposed by the Vendor to oversee implementation of this project.

22.4.1 The project manager and other assigned key vendor personnel must play a role in the presentation/demonstration/discussion;

22.4.2 The proposed key team members must be present at the on-site demonstration. The evaluation team reserves the right to interview the proposed key team members during this onsite visit;

22.4.3 Although on-site demonstrations may be requested, the demonstration will not be allowed in lieu of a written proposal;

22.4.4 The time and place of such presentations will be scheduled by the State to occur in Jackson, MS; and

22.4.5 All cost associated with this meeting will solely the responsibility of the Vendor.

22.5 Site Visits – At the State's option, Vendors that remain within a competitive range must be prepared to provide a reference site within seven calendar days of notification. If possible, the reference site should be in the Southeastern region of the United States. Vendor must list potential reference sites in the proposal.

SECTION VIII
COST INFORMATION SUBMISSION

Vendors must propose a summary of all applicable project costs in the matrix that follows. The matrix must be supplemented by a cost itemization fully detailing the basis of each cost category. The level of detail must address the following elements as applicable: item, description, quantity, retail, discount, extension, and deliverable. Any cost not listed in this section may result in the Vendor providing those products or services at no charge to the State or face disqualification.

Table 1 - State Data Center Hosted Solution

	Year 1	**Year 2**	**Year 3**	**Year 4**	**Year 5**	**5-year Total**
Implementation Deliverables						
Analysis, Design, & Customization						
Data conversion						
Legacy System data conversion						
Document Management System data conversion						
Etc. . . .						
Interfaces						
System Implementation (includes all travel expenses for onsite visits)						
Documentation						
Training						
Etc. . . .						
Total System Implementation Deliverables						

	Year 1	**Year 2**	**Year 3**	**Year 4**	**Year 5**	**5-year Total**
Software License (Price by module where appropriate)						
Process Request	____ x 12 mo	____ x 12 mo	____x 12 mo	____ x 12 mo	____ x 12 mo	
Manage Credentials	____ x 12 mo	____ x 12 mo	____x 12 mo	____ x 12 mo	____ x 12 mo	
Report Writer	____ x 12 mo	____ x 12 mo	____x 12 mo	____ x 12 mo	____ x 12 mo	
Etc…	____ x 12 mo	____ x 12 mo	____x 12 mo	____ x 12 mo	____ x 12 mo	
Other ( )	____ x 12 mo	____x 12 mo	____ x 12 mo	____ x 12 mo	____ x 12 mo	
Annual Cost–Software						
Maintenance and Support (Price by module where appropriate)						
Process Request						
Manage Credentials						
Report Writer						
Etc…						
Change Order Rate (Fully loaded)						
Project Manager						
Programmer						
Database Administrator						
Etc….						

Table 2 – MDE Hosted Solution

	Year 1	Year 2	Year 3	Year 4	Year 5	5-year Total
Implementation Deliverables						
Analysis, Design, & Customization						
Data conversion						
Legacy System data conversion						
Document Management System data conversion						
Etc. . . .						
Interfaces						
System Implementation (includes all travel expenses for onsite visits)						
Documentation						
Training						
Etc. . . .						
Total System Implementation Deliverables						
Other ( )						
Software License (Price by module where appropriate)						
Process Request	____ x 12 mo	____ x 12 mo	____x 12 mo	____ x 12 mo	____ x 12 mo	
Manage Credentials	____ x 12 mo	____ x 12 mo	____x 12 mo	____ x 12 mo	____ x 12 mo	

	Year 1	**Year 2**	**Year 3**	**Year 4**	**Year 5**	**5-year Total**
Report Writer	____ x 12 mo	____ x 12 mo	____x 12 mo	____ x 12 mo	____ x 12 mo	
Etc…	____ x 12 mo	____ x 12 mo	____x 12 mo	____ x 12 mo	____ x 12 mo	
Other ( )	____ x 12 mo	____x 12 mo	____ x 12 mo	____ x 12 mo	____ x 12 mo	
Other ( )						
Annual Cost–Software						
Maintenance and Support (Price by module where appropriate)						
Process Request						
Manage Credentials						
Report Writer						
Etc…						
Change Order Rate (Fully loaded)						
Project Manager						
Programmer						
Database Administrator						
Etc….						

Table 3 – Vendor Hosted Solution

	Year 1	Year 2	Year 3	Year 4	Year 5	5-year Total
Implementation Deliverables						
Analysis, Design, & Customization						
Data conversion						
Legacy System data conversion						
Document Management System data conversion						
Etc. . . .						
Interfaces						
System Implementation (includes all travel expenses for onsite visits)						
Documentation						
Training						
Etc. . . .						
Total System Implementation Deliverables						
Software License (Price by module where appropriate)						
Process Request	____ x 12 mo	____ x 12 mo	____x 12 mo	____ x 12 mo	____ x 12 mo	
Manage Credentials	____ x 12 mo	____ x 12 mo	____x 12 mo	____ x 12 mo	____ x 12 mo	
Report Writer	____ x 12 mo	____ x 12 mo	____x 12 mo	____ x 12 mo	____ x 12 mo	

	Year 1	**Year 2**	**Year 3**	**Year 4**	**Year 5**	**5-year Total**
Etc…	____ x 12 mo	____ x 12 mo	____x 12 mo	____ x 12 mo	____ x 12 mo	
Hosting	____ x 12 mo	____x 12 mo	____ x 12 mo	____ x 12 mo	____ x 12 mo	
Other ( )	____ x 12 mo	____x 12 mo	____ x 12 mo	____ x 12 mo	____ x 12 mo	
Other ( )						
Annual Cost–Software and Hosting						
Maintenance and Support (Price by module where appropriate)						
Process Request						
Manage Credentials						
Report Writer						
Etc…						
Change Order Rate (Fully loaded)						
Project Manager						
Programmer						
Database Administrator						
Etc….						

SECTION IX
REFERENCES

Please return the following Reference Forms, and if applicable, Subcontractor Reference Forms.

1. References

1.1 The Vendor must provide at least five (5) references consisting of Vendor accounts that the State may contact. Required information includes name, address, telephone number, and length of time the account has been a reference. Forms for providing reference information are included on the next page. The Vendor must make arrangements in advance with the account references so that they may be contacted at the Project team's convenience without further clearance or Vendor intercession. Failure to provide this information in the manner described may subject the Vendor's proposal to being rated unfavorably relative to these criteria or disqualified altogether at the State's sole discretion.

1.2 References should be based on the following profiles and be able to substantiate the following information from both management and technical viewpoints:

1.2.1 The reference installation must be similar in function and size to the agency/institution for which this RFP is issued;

1.2.2 The reference installation product/service must be configured similarly or identically to this RFP; and

1.2.3 The reference installation must have been operational for at least twelve (12) months.

2. Subcontractors

The Vendor's proposal must identify any subcontractor that will be used and include the name of the company, telephone number, contact person, type of work subcontractor will perform, number of certified employees to perform said work, and three (3) references for whom the subcontractor has performed work that the State may contact. Forms for providing subcontractor information and references are included at the end of this section. The Vendor must note that the same requirements found in the References section apply to subcontractors.

REFERENCE FORM

Complete five (5) Reference Forms.

Contact Name:
Company Name:
Address:
Phone #:
E-Mail:
Project Start Date:
Project End Date:

Description of product/services/project, including start and end dates:

SUBCONTRACTOR REFERENCE FORM

Complete a separate form for each subcontractor proposed.

Contact Name:
Company name:
Address:
Phone #:
E-Mail:

Scope of services/products to be provided by subcontractor:

Complete three (3) Reference Forms for each Subcontractor.

Contact Name:
Company name:
Address:
Phone #:
E-Mail:
Description of product/services/project, including start and end dates:

ATTACHMENT A
STANDARD CONTRACTS

A properly executed contract is a requirement of this RFP. After an award has been made, it will be necessary for the winning Vendor to execute a contract with **ITS**. The inclusion of these contracts do not preclude **ITS** from, at its sole discretion, negotiating additional terms and conditions with the selected Vendor(s) specific to the projects covered by this RFP.

If Vendor cannot comply with any term or condition of these Standard Contracts, Vendor must list and explain each specific exception on the *Proposal Exception Summary Form* included in Section V.

PROJECT NUMBER 37388
SOFTWARE TURNKEY AGREEMENT
BETWEEN
INSERT VENDOR NAME
AND
MISSISSIPPI DEPARTMENT OF INFORMATION TECHNOLOGY SERVICES
AS CONTRACTING AGENT FOR THE
MISSISSIPPI DEPARTMENT OF EDUCATION

This Software Turnkey Agreement (hereinafter referred to as "Agreement") is entered into by and between INSERT VENDOR NAME, a INSERT STATE OF INCORPORATION corporation having its principal place of business at INSERT VENDOR ADDRESS (hereinafter referred to as "Seller"), and Mississippi Department of Information Technology Services having its principal place of business at 301 North Lamar Street, Suite 508, Jackson, Mississippi 39201 (hereinafter referred to as "ITS"), as contracting agent for the Mississippi Department of Education located at 359 North West Street, Jackson, Mississippi 39201 (hereinafter referred to as "Purchaser"). ITS and Purchaser are sometimes collectively referred to herein as "State."

WHEREAS, Purchaser, pursuant to Request for Proposals ("RFP") Number 3590, requested proposals for the acquisition of certain software, installation and conversion services, and technical support (collectively "Turnkey Operation") necessary for the implementation of a Statewide Student Information System; and

WHEREAS, Seller was the successful proposer in an open, fair, and competitive procurement process to provide the system and services described above;

NOW, THEREFORE, in consideration of the mutual understandings, promises, consideration, and agreements set forth, the parties hereto agree as follows:

ARTICLE 1 PERIOD OF PERFORMANCE

1.1 This Agreement will become effective on the date it is signed by all parties and will continue in effect until all tasks required herein, including any post warranty maintenance/support specified in Exhibit A, have been completed. Seller agrees to complete all tasks required under this Agreement, with the exception of warranty service and post warranty maintenance, on or before June 30, 2011, or within such other period as may be agreed to by the parties.

1.2 This Agreement will become a binding obligation on the State only upon the issuance of a valid purchase order by the Purchaser following contract execution and the issuance by ITS of the CP-1 Acquisition Approval Document.

ARTICLE 2 TURNKEY OPERATION AND INSTALLATION

2.1 The Seller agrees to provide Purchaser with a turnkey system consisting of software, installation and conversion services, technical support, and training for the implementation of a Statewide Student Information System, as specified in RFP No. 3590. Seller agrees to facilitate the integration of the hardware and software for the particular purpose set forth in RFP No. 3590. Seller further agrees that the system as set forth in RFP No. 3590 and Seller's Proposal in response thereto shall operate efficiently and optimally in light of industry standards and as further specified in RFP No. 3590 and Seller's Proposal in response thereto. RFP No. 3590 and Seller's Proposal as accepted by the State in response thereto are incorporated herein by reference.

2.2 In matters of proposals, negotiations, contracts, and resolution of issues and/or disputes, the parties agree that: (a) Seller is solely responsible for all products and services being provided in this project; (b) Seller is responsible for the fulfillment of this project; and (c) Seller represents all contractors, third parties, and/or subcontractors Seller has assembled for this project. The Purchaser is required to negotiate only with Seller, as Seller's commitments, as specified in this Agreement, are binding on all proposed contractors, third parties, and subcontractors.

ARTICLE 3 PROCUREMENT OF SOFTWARE AND PURCHASE ORDERS

Subject to the terms and conditions set forth herein, Seller agrees to provide, at the location specified by Purchaser, and Purchaser agrees to buy as needed the software and services listed in the attached Exhibit A, which is incorporated herein and at the purchase price set forth therein. Purchaser shall submit a purchase order signed by a representative of Purchaser itemizing the items to be purchased. The purchase order shall be subject to the terms and conditions of this Agreement. The parties agree that Purchaser reserves the right to adjust the quantities of purchases based upon the availability of funding or as determined necessary by Purchaser. Seller guarantees pricing for a period of INSERT # days from the effective date of this Agreement. In the event there is a national price decrease of the products specified in Seller's Proposal during this time, Seller agrees to extend the new, lower pricing to Purchaser.

ARTICLE 4 DELIVERY, INSTALLATION, AND RISK OF LOSS

4.1 Seller shall deliver the software to the location specified by Purchaser, pursuant to the delivery schedule set forth by Purchaser.

4.2 Seller shall complete installation of the software pursuant to the requirements set forth in RFP No. 3590 and Article 5 herein. Seller acknowledges that installation of the system shall be accomplished with minimal interruption of Purchaser's normal day-to-day operations.

4.3 Seller shall assume and shall bear the entire risk of loss and damage to the software from any cause whatsoever while in transit and at all times throughout its possession thereof.

4.4 Seller shall be responsible for replacing, restoring, or bringing to at least original condition any damage to floors, ceilings, walls, furniture, grounds, pavements, sidewalks, and the like caused by its personnel and operations during the installation, subject to final approval of ITS. The repairs will be done only by technicians skilled in the various trades involved, using materials and workmanship to match those of the original construction in type and quality.

ARTICLE 5 SCHEDULE AND ACCEPTANCE

5.1 Seller warrants that all software shall be properly delivered, installed, and integrated for acceptance testing within the scheduling deadlines set forth by Purchaser, as the site is deemed ready for installation. Seller shall provide Purchaser with an installation schedule identifying the date, time, and location within the scheduling deadlines set forth in RFP No. 3590, or as may be agreed to by the parties.

5.2 During the project initiation, Seller and Purchaser will develop a mutually agreed upon project plan including the division of responsibility between Purchaser's staff and Seller's staff. It is understood by the parties that the project work plan must be in place prior to any other work being performed. Once this mutually agreed upon project plan, which will identify specific time frames and deliverable target dates for this project, has been developed, it will be incorporated into and made a part of this Agreement. The dates in the project plan will define the agreed upon period of performance. The parties acknowledge that the project plan will evolve and change from time to time upon the mutual written agreement of both parties. The parties agree that the deliverables and schedule set forth in the latest version of the project plan will take precedence over any prior plans.

5.3 **Deliverable Acceptance Testing:** Seller shall provide all documentation for the software being tested before acceptance testing will begin. Purchaser shall have a minimum of ten (10) business days to review each deliverable and to either notify Seller of acceptance or to provide Seller a detailed list of deficiencies that must be remedied prior to payment being made. In the event the Purchaser notifies the Seller of deficiencies, the Seller, at Seller's sole expense, shall correct such deficiencies within ten (10) business days, unless the Purchaser consents in writing to a longer period of time.

5.4 **Pilot Testing:** It is understood and agreed that Purchaser will conduct a three (3) month Pilot Test Period of the system that will include selected school districts located in various parts of the State of Mississippi, to ensure the system operates according to the specifications outlined in RFP No. 3590 in a live, day-to-day business environment. The Seller must provide technical staff onsite to assist with Pilot Testing as requested by Purchaser. All defects must be corrected by Seller within ten (10) business days. Purchaser will notify Seller in writing when the system has completed Pilot testing and is ready for Final System Acceptance Testing.

5.5 Final System Acceptance Testing: Upon notification by Seller that the turnkey system has been fully implemented and is ready for final system acceptance testing, Purchaser shall have thirty (30) business days to evaluate and test the system to confirm that it performs without any defects and performs pursuant to the specifications set forth in RFP No. 3590 and the Seller's Proposal in response thereto. Seller shall participate, as agreed upon by both parties, in the acceptance testing of the system by providing technical staff at Purchaser's location to provide assistance in demonstrating all functions of the system. The Purchaser's official representative must sign off on each application to ensure that the applications meet the functional and technical requirements. In the event that one (1) or more applications supplied by Seller are not accepted, the Seller shall correct the deficiencies or provide at its own expense whatever software that may be required to meet the acceptance criteria within ten (10) business days or a mutually agreed upon time period. In the event the system fails to perform as stated herein, Purchaser shall immediately notify Seller. Seller, at Seller's sole expense, shall correct defects identified by Purchaser within ten (10) business days, or such other period as the parties may agree upon. The thirty (30) business day Final System Acceptance testing period will be extended by system down-time. In the event Seller is unable to repair or replace the defective software, the Purchaser reserves the right to return defective software to Seller at Seller's expense and to cancel this Agreement. "Final Acceptance" shall mean written notice from Purchaser that it has accepted the system upon successful completion of the thirty (30) business day period during which time the system conformed in all material respects to the applicable specifications with no additional defects found.

ARTICLE 6 SOFTWARE LICENSE AND TERMS

6.1 Seller shall furnish the software to Purchaser as set forth in purchase orders submitted and executed by Purchaser and shall acquire the right to license the software to Purchaser. For purposes of this Article, the term "Purchaser" means the Mississippi Department of Education, its employees, and any third party consultants or outsourcers engaged by Purchaser who have a need to know and who shall be bound by the terms and conditions of this license and Agreement.

6.2 Seller accepts sole responsibility for: (a) Purchaser's system configuration, design, and requirements; (b) the selection of the software to achieve Purchaser's intended results; (c) the results obtained from the software; and (d) modifications, changes, or alterations to the software provided by Seller.

6.3 Seller understands and agrees that Purchaser shall have: (a) a non-exclusive, non-transferable, enterprise-wide unlimited, and perpetual license for the software listed in Exhibit A; (b) the right to use and customize the software products and the related documentation for Purchaser's business operations in accordance with the terms and conditions of this Agreement; (c) unlimited use by licensed users of the software products acquired for Purchaser's operations; (d) use of such software products with a backup platform system, should it be deemed necessary by Purchaser; (e) the right to copy such software for safekeeping, backup, and disaster recovery

purposes; (f) the right to combine the software with other programs and modules and the right to create interfaces to other programs; and (g) the right to reproduce any and all physical documentation supplied under the terms of this Agreement.

6.4 Purchaser agrees that, except as noted herein, it will not otherwise copy, translate, modify, adapt, decompile, disassemble, or reverse engineer any of the software without the prior written consent of Seller. All title and proprietary rights, whether tangible or intangible, including but not limited to copyright, trademark, and trade secret rights, in and to the software are retained by the Seller or the third party software manufacturer as applicable. Purchaser agrees to reproduce and include the copyright, trademark, and other proprietary rights notices on any copies made of the software and documentation.

ARTICLE 7 CONVERSION AND TRAINING

Seller shall, for the fees specified in the attached Exhibit A, provide the conversion activities as well as the training specified in RFP No. 3590 and Seller's Proposal, as accepted by Purchaser, in response thereto. Seller and Purchaser shall mutually agree on the time for the training and an outline of the training to be provided. Seller specifically understands and agrees that Purchaser will not accept the system until Seller completes the conversion and training requirements. Seller agrees to provide, upon delivery, all user documentation and technical manuals needed to fully acquaint the user with operation of the software.

ARTICLE 8 CONSIDERATION AND METHOD OF PAYMENT

8.1 Except as provided in the Change Order Rate and Procedure Article of this Agreement, the total compensation to be paid to the Seller by the Purchaser shall not exceed the fixed price of INSERT TOTAL COMPENSATION for all software, products, services, travel, performances and expenses under this Agreement, payable as described in Exhibit A, unless prior written authorization from ITS has been obtained. Authorization of payments is subject to the written approval of the Purchaser.

8.2 The Seller and the Purchaser agree to the Deliverable Schedule as set forth in the Payment Schedule and Deliverables List included as Exhibit A to this Agreement. The Seller will receive payment in the amount indicated in Article 8.1 herein, less retainage to be withheld in accordance with the Retainage Article herein, upon written acceptance by the Purchaser of each of the deliverables defined therein. The parties agree that as the project work plan is revised by written agreement of the parties during the term of this Agreement, the anticipated dates for acceptance of deliverables and for the corresponding payments to the Seller, but not the amounts of those payments, may likewise be revised only by written agreement of the parties.

8.3 Upon written acceptance, as set forth in Article 5 herein, by the Purchaser of a deliverable which has an associated payment, the Seller will invoice the Purchaser for the invoice amount of that payment as indicated in the attached Exhibit A, less retainage to be

withheld in accordance with the Retainage Article herein. Seller shall certify that the billing is true and correct. Seller shall submit invoices and supporting documentation to Purchaser electronically during the term of this Agreement using the processes and procedures identified by the State. Purchaser agrees to pay Seller in accordance with Mississippi law on "Timely Payments for Purchases by Public Bodies," Sections 31-7-301, et seq. of the 1972 Mississippi Code Annotated, as amended, which generally provides for payment of undisputed amounts by the State within forty-five (45) days of receipt of the invoice. Seller understands and agrees that Purchaser is exempt from the payment of taxes. All payments should be made in United States currency. Payments by state agencies using the Statewide Automated Accounting System ("SAAS") shall be made and remittance information provided electronically as directed by the State. These payments by SAAS agencies shall be deposited into the bank account of the Seller's choice. No payment, including final payment, shall be construed as acceptance of defective products or incomplete work, and the Seller shall remain responsible and liable for full performance in strict compliance with the contract documents specified in the article herein titled "Entire Agreement."

8.4 Acceptance by the Seller of the last payment from the Purchaser shall operate as a release of all claims against the State by the Seller and any subcontractors or other persons supplying labor or materials used in the performance of the work under this Agreement.

ARTICLE 9 WARRANTIES

9.1 Seller represents and warrants that all software and services provided by Seller shall meet or exceed the minimum specifications set forth in RFP No. 3590 and Seller's Proposal in response thereto.

9.2 Seller represents and warrants that Seller has the right to license the software provided under this Agreement.

9.3 Seller represents and warrants that all software furnished will be free from material defects for a period of **Error! Reference source not found.** after final acceptance of the complete system and will provide Purchaser complete functionality necessary for the operation of the system as stated in RFP No. 3590 and the Seller's Proposal in response thereto. This warranty shall cover all components of the system, including but not limited to all programs, screens, reports, subroutines, utilities, file structures, documentation, interfaces, or other items provided by the Seller. This warranty will apply to the base package plus any customized programs, screens, reports, subroutines, interfaces, utilities, file structures, documentation, or other items proposed and delivered by the Seller specifically for this project. The Seller shall give immediate high priority attention to any mission critical corrections that are needed. If the software does not function accordingly, Seller shall, within five (5) working days and at no cost to Purchaser, correct the defects identified, or replace the software with software that is compliant with this warranty. In the event Seller cannot repair or replace the software, Seller shall at the State's

election, either refund the fees paid for the software and for any services that directly relate to the defective software, or secure alternate software, acceptable to the Purchaser which will insure functionality of the system.

9.4 Seller represents and warrants that the turnkey system is fit for the particular purpose set forth in this Agreement and RFP No. 3590, with regard to Purchaser's foreseeable or projected needs.

9.5 Seller represents and warrants that it has and will obtain and pass through to Purchaser any and all warranties obtained or available from the licensor of software supplied to Seller.

9.6 Seller represents and warrants that all work performed hereunder, including but not limited to consulting, conversion, training, technical support, and maintenance, shall be performed by competent personnel, shall be of professional quality consistent with generally accepted industry standards for the performance of such services, and shall comply in all respects with the requirements of this Agreement. For any breach of this warranty, the Seller shall, for a period of ninety (90) days from the performance of service, perform the services again at no cost to the Purchaser, or if the Seller is unable to perform the services as warranted, the Seller shall reimburse the Purchaser the fees paid to the Seller for the unsatisfactory services.

9.7 Seller represents and warrants that there is no disabling code or a lockup program or device embedded in the software provided to Purchaser. Seller further agrees that it will not under any circumstances, including enforcement of a valid contract right, (a) install or trigger a lockup program or device, or (b) take any step which would in any manner interfere with Purchaser's use of the software and/or which would restrict Purchaser from accessing its data files or in any way interfere with the transaction of Purchaser's business. For any breach of this warranty, Seller, at its expense, shall, within five (5) working days after receipt of notification of the breach, deliver Products to Purchaser that are free of such disabling code or a lockup program or device.

9.8 Seller represents and warrants that the software, as delivered to Purchaser, does not contain a computer virus. For any breach of this warranty, Seller, at its expense, shall, within five (5) working days after receipt of notification of the breach, deliver Products to Purchaser that are free of any virus and shall be responsible for repairing, at Seller's expense, any and all damage done by the virus to Purchaser's site.

9.9 Seller represents and warrants that upon completion of the project the Seller and all subcontractors shall convey to Purchaser copies of all interim reports, data collection forms, and any working papers that support the final acceptance of the system.

9.10 Seller represents and warrants that it presently has and will continue to maintain, at its own expense, throughout the term of this Agreement, valid licenses for all software, trademarks, service marks, patents and copyrighted material and any other proprietary information of a third party that it will deploy in support of all products Seller uses in the performance of this Agreement. Seller further represents and warrants that upon Purchaser's request, Seller shall pass through such licenses to Purchaser at no cost to Purchaser. In the event the licenses are passed through to Purchaser, such licenses shall name the Purchaser as the license holder of record and such licenses shall be established in such a manner so as to survive the termination/expiration of this Agreement. For any breach of the preceding warranty, Seller at its own expense shall within five (5) business days after receipt of notification of the breach, secure and/or pass through, as applicable, the necessary licenses. Failure of the Seller to secure and/or pass through such licenses to Purchaser shall be considered a material breach of this Agreement and the Purchaser may, at its sole discretion, pursue its rights as set forth in the Termination Article herein and any other rights and remedies it may have at law or in equity.

9.11 Seller represents and warrants that it will ensure its compliance with the Mississippi Employment Protection Act, Section 71-11-1, et seq. of the Mississippi Code Annotated (Supp2008), and will register and participate in the status verification system for all newly hired employees. The term "employee" as used herein means any person that is hired to perform work within the State of Mississippi. As used herein, "status verification system" means the Illegal Immigration Reform and Immigration Responsibility Act of 1996 that is operated by the United States Department of Homeland Security, also known as the E-Verify Program, or any other successor electronic verification system replacing the E-Verify Program. Seller agrees to maintain records of such compliance and, upon request of the State, to provide a copy of each such verification to the State. Seller further represents and warrants that any person assigned to perform services hereunder meets the employment eligibility requirements of all immigration laws of the State of Mississippi. Seller understands and agrees that any breach of these warranties may subject Seller to the following: (a) termination of this Agreement and ineligibility for any state or public contract in Mississippi for up to three (3) years, with notice of such cancellation/termination being made public, or (b) the loss of any license, permit, certification or other document granted to Seller by an agency, department or governmental entity for the right to do business in Mississippi for up to one (1) year, or (c) both. In the event of such termination/cancellation, Seller would also be liable for any additional costs incurred by the State due to contract cancellation or loss of license or permit.

9.12 Seller represents and warrants that the system provided pursuant to this Agreement will pass both internal security audits and independent security audits. For any breach of the preceding warranty at any time during which the system is covered by warranty, maintenance and/or support, Seller shall, at its own expense and at no cost to Purchaser, remediate any defect, anomaly or security vulnerability in the system by repairing and/or replacing any and all components of the system necessary in order for the system to be secure.

9.13 Seller represents and warrants that no official or employee of Purchaser or of ITS, and no other public official of the State of Mississippi who exercises any functions or responsibilities in the review or approval of the undertaking or carrying out of the project shall, prior to the completion of said project, voluntarily acquire any personal interest, direct or indirect, in this Agreement. The Seller warrants that it has removed any material conflict of interest prior to the signing of this Agreement, and that it shall not acquire any interest, direct or indirect, which would conflict in any manner or degree with the performance of its responsibilities under this Agreement. The Seller also warrants that in the performance of this Agreement no person having any such known interests shall be employed.

9.14 The Seller represents and warrants that no elected or appointed officer or other employee of the State of Mississippi, nor any member of or delegate to Congress has or shall benefit financially or materially from this Agreement. No individual employed by the State of Mississippi shall be admitted to any share or part of the Agreement or to any benefit that may arise therefrom. The State of Mississippi may, by written notice to the Seller, terminate the right of the Seller to proceed under this Agreement if it is found, after notice and hearing by the ITS Executive Director or his/her designee, that gratuities in the form of entertainment, gifts, jobs, or otherwise were offered or given by the Seller to any officer or employee of the State of Mississippi with a view toward securing this Agreement or securing favorable treatment with respect to the award, or amending or making of any determinations with respect to the performing of such contract, provided that the existence of the facts upon which the ITS Executive Director makes such findings shall be in issue and may be reviewed in any competent court. In the event this Agreement is terminated under this article, the State of Mississippi shall be entitled to pursue the same remedies against the Seller as it would pursue in the event of a breach of contract by the Seller, including punitive damages, in addition to any other damages to which it may be entitled at law or in equity.

ARTICLE 10 INFRINGEMENT INDEMNIFICATION

Seller represents and warrants that neither the software, its elements, nor the use thereof violates or infringes on any copyright, patent, trademark, servicemark, trade secret, or other proprietary right of any person or entity. Seller, at its own expense, shall defend or settle any and all infringement actions filed against Seller or Purchaser which involves the software provided under this Agreement and shall pay all settlements, as well as all costs, attorney fees, damages, and judgment finally awarded against Purchaser. If the continued use of the products for the purpose intended is threatened to be enjoined or is enjoined by any court of competent jurisdiction, Seller shall, at its expense: (a) first procure for Purchaser the right to continue using such products, or upon failing to procure such right; (b) modify or replace them with non-infringing products while maintaining substantially similar software functionality or data/informational content, or upon failing to secure either such right; (c) refund to Purchaser the software license fees previously paid by Purchaser for the products Purchaser may no longer use.

Said refund shall be paid within ten (10) working days of notice to Purchaser to discontinue said use.

ARTICLE 11 SOFTWARE WARRANTY AND SUPPORT SERVICES

39.1 As part of the warranty services and software support and maintenance services, Seller will maintain the software in an operable condition according to the specifications contained in the technical manuals and as outlined in RFP No. 3590 and the Seller's Proposal in response thereto. Seller shall provide Purchaser with enhancements to the software as they are made generally available from time to time. Notwithstanding any other provisions of this Agreement, Seller shall provide support only with respect to the then-current generally available version of the software.

39.2 Seller shall also provide unlimited email and toll-free telephone technical support in the operation of the software twenty-four (24) hours a day, seven (7) days a week. Seller shall respond by telephone within one (1) hour to requests for support services. Purchaser shall be given priority placement in the support queue for all system locking situations or problems claimed by Purchaser to be a mission critical process. Upon receipt of Purchaser's call, Seller will (a) create an error report, (b) assign a severity level and (c) attempt to resolve the software problem in accordance with the procedures and processes for problem resolution detailed below. It is understood by the parties that the Purchaser and Seller must mutually agree on whether an error is classified as a Severity Level 1, 2, 3, or 4 error.

39.3 Severity Level 1 shall be defined as urgent situations, when the State's production system is down and the State is unable to use the proposed system. The Seller's technical support staff shall accept the State's call for assistance at the time the State places the initial call; however, if such staff is not immediately available, the Seller shall return the State's call within one (1) business hour. The Seller shall resolve Severity Level 1 problems within one (1) business day, or within a mutually agreed upon time frame.

39.4 Severity Level 2 shall be defined as a critical software system component that has significant outages and/or failure precluding its successful operation, and possibly endangering the State's environment. The proposed system may operate but is severely restricted (e.g., a frequently used functionality gives an incorrect response). The Seller's technical support staff shall accept the State's call for assistance at the time the State places the initial call; however, if such staff is not immediately available, the Seller shall return the State's call within one (1) business hour. The Seller shall resolve Severity Level 2 problems within two (2) business days, or within a mutually agreed upon time frame.

39.5 Severity Level 3 shall be defined as a minor problem that exists with the system but the majority of the functions are still usable and some circumvention may be required to provide service (e.g., an infrequently used functionality gives an incorrect response). The Seller's

technical support staff shall accept the State's call for assistance at the time the State places the initial call; however, if such staff is not immediately available, the Seller shall return the State's call within three (3) business hours. The Seller shall resolve Severity Level 3 problems within ten (10) business days, or within a mutually agreed upon time frame.

39.6 Severity Level 4 shall be defined as a very minor problem or question that does not affect the system's function (e.g., the text of a message is worded poorly or misspelled). The Seller's technical support staff shall accept the State's call for assistance at the time the State places the initial call; however, if such staff is not immediately available, the Seller shall return the State's call within four (4) business hours. The Seller shall resolve Severity Level 4 problems within fifteen (15) business days, or within a mutually agreed upon time frame.

39.7 Sixty (60) days prior to expiration of the initial software support period or any renewal term thereof, Seller shall notify Purchaser in writing of the impending expiration, and Purchaser shall have thirty (30) days in which to notify Seller of its decision to either renew or cancel any further software support. In no event shall the cost for software support increase by more than five percent (5%) per year.

ARTICLE 12 EMPLOYMENT STATUS

12.1 Seller shall, during the entire term of this Agreement, be construed to be an independent contractor. Nothing in this Agreement is intended to nor shall it be construed to create an employer-employee relationship or a joint venture relationship.

12.2 Seller represents that it is qualified to perform the duties to be performed under this Agreement and that it has or will secure, if needed, at its own expense, applicable personnel who shall be qualified to perform the duties required under this Agreement. Such personnel shall not be deemed in any way, directly or indirectly, expressly or by implication, to be employees of Purchaser. Seller shall pay, when due, all salaries and wages of its employees, and it accepts exclusive responsibility for the payment of federal income tax, state income tax, social security, unemployment compensation, and any other withholdings that may be required. Neither Seller nor employees of Seller are entitled to state retirement or leave benefits.

12.3 Any person assigned by Seller to perform the services hereunder shall be the employee of Seller, who shall have the sole right to hire and discharge its employee. Purchaser may, however, direct Seller to replace any of its employees under this Agreement. If Seller is notified within the first eight (8) hours of assignment that the person is unsatisfactory, Seller will not charge Purchaser for those hours.

12.4 It is further understood that the consideration expressed herein constitutes full and complete compensation for all services and performances hereunder and that any sum due and

payable to Seller shall be paid as a gross sum with no withholdings or deductions being made by Purchaser for any purpose from said contract sum.

ARTICLE 13 BEHAVIOR OF EMPLOYEES/SUBCONTRACTORS

Seller will be responsible for the behavior of all its employees and subcontractors while on the premises of any Purchaser location. Any employee or subcontractor acting in a manner determined by the administration of that location to be detrimental, abusive, or offensive to any of the staff and/or student body will be asked to leave the premises and may be suspended from further work on the premises. All Seller employees and subcontractors who will be working at such locations to install or repair Products shall be covered by Seller's comprehensive general liability insurance policy.

ARTICLE 14 MODIFICATION OR RENEGOTIATION

This Agreement may be modified only by written agreement signed by the parties hereto, and any attempt at oral modification shall be void and of no effect. The parties agree to renegotiate the Agreement if federal and/or state revisions of any applicable laws or regulations make changes in this Agreement necessary.

ARTICLE 15 AUTHORITY, ASSIGNMENT AND SUBCONTRACTS

15.1 In matters of proposals, negotiations, contracts, and resolution of issues and/or disputes, the parties agree that Seller represents all contractors, third parties, and/or subcontractors Seller has assembled for this project. The Purchaser is required to negotiate only with Seller, as Seller's commitments are binding on all proposed contractors, third parties, and subcontractors.

15.2 Neither party may assign or otherwise transfer this Agreement or its obligations hereunder without the prior written consent of the other party, which consent shall not be unreasonably withheld. Any attempted assignment or transfer of its obligations without such consent shall be null and void. This Agreement shall be binding upon the parties' respective successors and assigns.

15.3 Seller must obtain the written approval of Purchaser before subcontracting any portion of this Agreement. No such approval by Purchaser of any subcontract shall be deemed in any way to provide for the incurrence of any obligation of Purchaser in addition to the total fixed price agreed upon in this Agreement. All subcontracts shall incorporate the terms of this Agreement and shall be subject to the terms and conditions of this Agreement and to any conditions of approval that Purchaser may deem necessary.

15.4 Seller represents and warrants that any subcontract agreement Seller enters into shall contain a provision advising the subcontractor that the subcontractor shall have no lien and no legal right to assert control over any funds held by the Purchaser, that the subcontractor acknowledges that no privity of contract exists between the Purchaser and the subcontractor, and

that the Seller is solely liable for any and all payments which may be due to the subcontractor pursuant to its subcontract agreement with the Seller. The Seller shall indemnify and hold harmless the State from and against any and all claims, demands, liabilities, suits, actions, damages, losses, costs, and expenses of every kind and nature whatsoever arising as a result of Seller's failure to pay any and all amounts due by Seller to any subcontractor, materialman, laborer, or the like.

15.5 All subcontractors shall be bound by any negotiation, arbitration, appeal, adjudication, or settlement of any dispute between the Seller and the Purchaser, where such dispute affects the subcontract.

ARTICLE 16 AVAILABILITY OF FUNDS

It is expressly understood and agreed that the obligation of Purchaser to proceed under this Agreement is conditioned upon the appropriation of funds by the Mississippi State Legislature and the receipt of state and/or federal funds for the performances required under this Agreement. If the funds anticipated for the fulfillment of this Agreement are not forthcoming or are insufficient, either through the failure of the federal government to provide funds or of the State of Mississippi to appropriate funds, or if there is a discontinuance or material alteration of the program under which funds were available to Purchaser for the payments or performance due under this Agreement, Purchaser shall have the right to immediately terminate this Agreement without damage, penalty, cost, or expense to Purchaser of any kind whatsoever. The effective date of termination shall be as specified in the notice of termination. Purchaser shall have the sole right to determine whether funds are available for the payments or performances due under this Agreement.

ARTICLE 17 TERMINATION

Notwithstanding any other provision of this Agreement to the contrary, this Agreement may be terminated, in whole or in part, as follows: (a) upon the mutual, written agreement of the parties; (b) by Purchaser, without the assessment of any penalties, upon thirty (30) days written notice to Seller, if Seller becomes the subject of bankruptcy, reorganization, liquidation, or receivership proceedings, whether voluntary or involuntary; (c) by Purchaser, without the assessment of any penalties, for any reason after giving thirty (30) days written notice specifying the effective date thereof to Seller; or (d) by either party in the event of a breach of a material term or provision of this Agreement where such breach continues for thirty (30) days after the breaching party receives written notice from the other party. Upon termination, Purchaser will be entitled to a refund of applicable unexpended prorated annual software support fees/charges, if any. In the event of termination, Seller shall be paid for satisfactory work completed or services rendered by Seller in connection with this Agreement and accepted by Purchaser as of the date of receipt of notification of termination. In no case shall said compensation exceed the total contract price. The provisions of this Article do not limit either party's right to pursue any other remedy available at law or in equity.

ARTICLE 18 GOVERNING LAW
This Agreement shall be construed and governed in accordance with the laws of the State of Mississippi, and venue for the resolution of any dispute shall be Jackson, Hinds County, Mississippi. Seller expressly agrees that under no circumstances shall Purchaser or ITS be obligated to pay an attorney's fee, prejudgment interest, or the cost of legal action to Seller. Further, nothing in this Agreement shall affect any statutory rights Purchaser may have that cannot be waived or limited by contract.

ARTICLE 19 WAIVER
Failure of either party hereto to insist upon strict compliance with any of the terms, covenants, and conditions hereof shall not be deemed a waiver or relinquishment of any similar right or power hereunder at any subsequent time or of any other provision hereof, nor shall it be construed to be a modification of the terms of this Agreement. A waiver by the State, to be effective, must be in writing, must set out the specifics of what is being waived, and must be signed by an authorized representative of the State.

ARTICLE 20 SEVERABILITY
If any term or provision of this Agreement is prohibited by the laws of the State of Mississippi or declared invalid or void by a court of competent jurisdiction, the remainder of this Agreement shall be valid and enforceable to the fullest extent permitted by law, provided that the State's purpose for entering into this Agreement can be fully achieved by the remaining portions of the Agreement that have not been severed.

ARTICLE 21 CAPTIONS
The captions or headings in this Agreement are for convenience only and in no way define, limit, or describe the scope or intent of any provision or section of this Agreement.

ARTICLE 22 HOLD HARMLESS
To the fullest extent allowed by law, Seller shall indemnify, defend, save and hold harmless, protect, and exonerate Purchaser, ITS and the State, its Board Members, officers, employees, agents, and representatives from and against any and all claims, demands, liabilities, suits, actions, damages, losses, costs, and expenses of every kind and nature whatsoever, including, without limitation, court costs, investigative fees and expenses, attorney fees, and claims for damages arising out of or caused by Seller and/or its partners, principals, agents, employees, or subcontractors in the performance of or failure to perform this Agreement.

ARTICLE 23 THIRD PARTY ACTION NOTIFICATION
Seller shall notify Purchaser in writing within five (5) business days of Seller filing bankruptcy, reorganization, liquidation or receivership proceedings or within five (5) business days of its receipt of notification of any action or suit being filed or any claim being made against Seller or

Purchaser by any entity that may result in litigation related in any way to this Agreement and/or which may affect the Seller's performance under this Agreement. Failure of the Seller to provide such written notice to Purchaser shall be considered a material breach of this Agreement and the Purchaser may, at its sole discretion, pursue its rights as set forth in the Termination Article herein and any other rights and remedies it may have at law or in equity.

ARTICLE 24 AUTHORITY TO CONTRACT

Seller warrants that it is a validly organized business with valid authority to enter into this Agreement, that entry into and performance under this Agreement is not restricted or prohibited by any loan, security, financing, contractual, or other agreement of any kind, and notwithstanding any other provision of this Agreement to the contrary, that there are no existing legal proceedings or prospective legal proceedings, either voluntary or otherwise, which may adversely affect its ability to perform its obligations under this Agreement.

ARTICLE 25 NOTICE

Any notice required or permitted to be given under this Agreement shall be in writing and personally delivered or sent by electronic means, provided that the original of such notice is sent by certified United States mail, postage prepaid, return receipt requested, or overnight courier with signed receipt, to the party to whom the notice should be given at their business address listed herein. ITS' address for notice is: Mr. David L. Litchliter, Executive Director, Mississippi Department of Information Technology Services, 301 North Lamar Street, Suite 508, Jackson, Mississippi 39201. Purchaser's address for notice is: Mr. Derrick Lindsay, Chief Information Officer, Mississippi Department of Education, 359 North West Street, Jackson, Mississippi 39201. The Seller's address for notice is: INSERT VENDOR NOTICE INFORMATION. Notice shall be deemed given when actually received or when refused. The parties agree to promptly notify each other in writing of any change of address.

ARTICLE 26 RECORD RETENTION AND ACCESS TO RECORDS

Seller shall establish and maintain financial records, supporting documents, statistical records and such other records as may be necessary to reflect its performance of the provisions of this Agreement. The Purchaser, ITS, any state or federal agency authorized to audit Purchaser, and/or any of their duly authorized representatives, shall have unimpeded, prompt access to this Agreement and to any of the Seller's proposals, books, documents, papers and/or records that are pertinent to this Agreement to make audits, copies, examinations, excerpts and transcriptions at the State's or Seller's office as applicable where such records are kept during normal business hours. All records relating to this Agreement shall be retained by the Seller for three (3) years from the date of receipt of final payment under this Agreement. However, if any litigation or other legal action, by or for the state or federal government has begun that is not completed at the end of the three (3) year period, or if an audit finding, litigation or other legal action has not been resolved at the end of the three (3) year period, the records shall be retained until resolution.

ARTICLE 27 INSURANCE
Seller represents that it will maintain workers' compensation insurance as prescribed by law, which shall inure to the benefit of Seller's personnel, as well as comprehensive general liability and employee fidelity bond insurance. Seller will, upon request, furnish Purchaser with a certificate of conformity providing the aforesaid coverage.

ARTICLE 28 DISPUTES
Any dispute concerning a question of fact under this Agreement, which is not disposed of by agreement of the Seller and Purchaser, shall be decided by the Executive Director of ITS or his/her designee. This decision shall be reduced to writing and a copy thereof mailed or furnished to the parties. Disagreement with such decision by either party shall not constitute a breach under the terms of this Agreement. Such disagreeing party shall be entitled to seek such other rights and remedies it may have at law or in equity.

ARTICLE 29 COMPLIANCE WITH LAWS
Seller shall comply with and all activities under this Agreement shall be subject to all Purchaser policies and procedures and all applicable federal, state, and local laws, regulations, policies, and procedures as now existing and as may be amended or modified. Specifically, but not limited to, Seller shall not discriminate against any employee nor shall any party be subject to discrimination in the performance of this Agreement because of race, creed, color, sex, age, national origin, or disability.

ARTICLE 30 CONFLICT OF INTEREST
Seller shall notify Purchaser of any potential conflict of interest resulting from the representation of or service to other clients. If such conflict cannot be resolved to Purchaser's satisfaction, Purchaser reserves the right to terminate this Agreement.

ARTICLE 31 SOVEREIGN IMMUNITY
By entering into this Agreement with Seller, the State of Mississippi does in no way waive its sovereign immunities or defenses as provided by law.

ARTICLE 32 CONFIDENTIAL INFORMATION
32.1 Seller shall treat all Purchaser data and information to which it has access by its performance under this Agreement as confidential and shall not disclose such data or information to a third party without specific written consent of Purchaser. In the event that Seller receives notice that a third party requests divulgence of confidential or otherwise protected information and/or has served upon it a subpoena or other validly issued administrative or judicial process ordering divulgence of such information, Seller shall promptly inform Purchaser and thereafter respond in conformity with such subpoena to the extent mandated by state and/or federal laws, rules, and regulations. This Article shall survive the termination or completion of this Agreement, shall continue in full force and effect, and shall be binding upon the Seller and its

agents, employees, successors, assigns, subcontractors, or any party or entity claiming an interest in this Agreement on behalf of or under the rights of the Seller, following any termination or completion of this Agreement.

32.2 With the exception of any attached exhibits which are labeled as "confidential", the parties understand and agree that this Agreement does not constitute confidential information, and may be reproduced and distributed by the State without notification to Seller. ITS will provide third party notice to Seller of any requests received by ITS for any such confidential exhibits so as to allow Seller the opportunity to protect the information by court order as outlined in ITS Public Records Procedures.

ARTICLE 33 EFFECT OF SIGNATURE

Each person signing this Agreement represents that he or she has read the Agreement in its entirety, understands its terms, is duly authorized to execute this Agreement on behalf of the parties, and agrees to be bound by the terms contained herein. Accordingly, this Agreement shall not be construed or interpreted in favor of or against the State or the Seller on the basis of draftsmanship or preparation hereof.

ARTICLE 34 OWNERSHIP OF DOCUMENTS AND WORK PRODUCTS

All data, electronic or otherwise, collected by Seller and all documents, notes, programs, databases (and all applications thereof), files, reports, studies, and/or other material collected and prepared by Seller in connection with this Agreement, whether completed or in progress, shall be the property of Purchaser upon completion of this Agreement or upon termination of this Agreement. Purchaser hereby reserves all rights to the databases and all applications thereof and to any and all information and/or materials prepared in connection with this Agreement. Seller is prohibited from use of the above described information and/or materials without the express written approval of Purchaser.

ARTICLE 35 NON-SOLICITATION OF EMPLOYEES

Seller agrees not to employ or to solicit for employment, directly or indirectly, any of the Purchaser's employees until at least one (1) year after the expiration/termination of this Agreement, unless mutually agreed to the contrary in writing by the Purchaser and the Seller, and provided that such an agreement between these two entities is not a violation of the laws of the State of Mississippi or the federal government.

ARTICLE 36 ENTIRE AGREEMENT

36.1 This Agreement constitutes the entire agreement of the parties with respect to the subject matter contained herein and supersedes and replaces any and all prior negotiations, understandings, and agreements, written or oral, between the parties relating hereto, including all terms of any unsigned or "shrink-wrap" license included in any package, media, or electronic version of Seller-furnished software, or any "click-wrap" or "browse-wrap" license presented in

connection with a purchase via the Internet. The RFP No. 3590 and Seller's Proposal in response to RFP No. 3590 are hereby incorporated into and made a part of this Agreement.

36.2 The Agreement made by and between the parties hereto shall consist of and precedence is hereby established by the order of the following:

A. This Agreement signed by both parties;
B. Any exhibits attached to this Agreement;
C. RFP No. 3590 and written addenda; and
D. Seller's Proposal, as accepted by Purchaser, in response to RFP No. 3590.

36.3 The intent of the above listed documents is to include all items necessary for the proper execution and completion of the services by the Seller. The documents are complementary, and what is required by one shall be binding as if required by all. A higher order document shall supersede a lower order document to the extent necessary to resolve any conflict or inconsistency arising under the various provisions thereof, provided, however, that in the event an issue is addressed in one of the above mentioned documents but is not addressed in another of such documents, no conflict or inconsistency shall be deemed to occur by reason thereof. The documents listed above are shown in descending order of priority, that is, the highest document begins with the first listed document ("A. This Agreement") and the lowest document is listed last ("D. Seller's Proposal").

ARTICLE 37 STATE PROPERTY AND LOCATION OF WORK

37.1 Seller shall be responsible for the proper custody of any Purchaser-owned property furnished for Seller's use in connection with work performed pursuant to this Agreement. Seller shall reimburse the Purchaser for any loss or damage, normal wear and tear excepted.

37.2 All work provided in connection with this contract will be required to be performed on-site in the Purchaser's offices in Jackson, Mississippi, unless written approval is received from the State. Seller accepts full responsibility for all problems arising out of a decision to perform off-site work.

ARTICLE 38 SURVIVAL

Articles 9, 10, 11, 18, 22, 26, 31, 32, 34, 35, and all other articles, which by their express terms so survive or which should so reasonably survive, shall survive any termination or expiration of this Agreement.

ARTICLE 39 DEBARMENT AND SUSPENSION CERTIFICATION

Seller certifies that neither it nor its principals: (a) are presently debarred, suspended, proposed for debarment, declared ineligible, or voluntarily excluded from covered transactions by any federal department or agency; (b) have, within a three (3) year period preceding this Agreement,

been convicted of or had a civil judgment rendered against them for commission of fraud or a criminal offense in connection with obtaining, attempting to obtain, or performing a public (federal, state, or local) transaction or contract under a public transaction; violation of federal or state anti-trust statutes or commission of embezzlement, theft, forgery, bribery, falsification or destruction of records, making false statements, or receiving stolen property; (c) are presently indicted of or otherwise criminally or civilly charged by a governmental entity with the commission of fraud or a criminal offense in connection with obtaining, attempting to obtain, or performing a public (federal, state, or local) transaction or contract under a public transaction; violation of federal or state anti-trust statutes or commission of embezzlement, theft, forgery, bribery, falsification or destruction of records, making false statements, or receiving stolen property; and (d) have, within a three (3) year period preceding this Agreement, had one or more public transactions (federal, state, or local) terminated for cause or default.

ARTICLE 40 NETWORK SECURITY

Seller and Purchaser understand and agree that the State of Mississippi's Enterprise Security Policy mandates that all remote access to and/or from the State network must be accomplished via a Virtual Private Network (VPN). If remote access is required at any time during the life of this Agreement, Seller and Purchaser agree to implement/maintain a VPN for this connectivity. This required VPN must be IPSec-capable (ESP tunnel mode) and will terminate on a Cisco VPN-capable device (i.e. VPN concentrator, PIX firewall, etc.) on the State's premises. Seller agrees that it must, at its expense, implement/maintain a compatible hardware/software solution to terminate the specified VPN on the Seller's premises. The parties further understand and agree that the State protocol standard and architecture are based on industry-standard security protocols and manufacturer engaged at the time of contract execution. The State reserves the right to introduce a new protocol and architecture standard and require the Seller to comply with same in the event the industry introduces a more secure, robust protocol to replace IPSec/ESP and/or there is a change in the manufacturer engaged.

ARTICLE 41 STATUTORY AUTHORITY

By virtue of Section 25-53-21 of the Mississippi Code Annotated, as amended, the Executive Director of ITS is the purchasing and contracting agent for the State of Mississippi in the negotiation and execution of all contracts for the acquisition of information technology equipment, software, and services. The parties understand and agree that ITS as contracting agent is not responsible or liable for the performance or non-performance of any of Purchaser's or Seller's contractual obligations, financial or otherwise, contained within this Agreement.

ARTICLE 42 CHANGE ORDER RATE AND PROCEDURE

42.1 It is understood that the State may, at any time, by a written order, make changes in the scope of the project. No changes in scope are to be conducted or performed by the Seller except by the express written approval of the State. The Seller shall be obligated to perform all changes requested by the Purchaser which have no price or schedule effect.

42.2 The Seller shall have no obligation to proceed with any change that has a price or schedule effect until the parties have mutually agreed in writing thereto. Neither the State nor the Seller shall be obligated to execute such a change order; if no such change order is executed, the Seller shall not be obliged or authorized to perform services beyond the scope of this Agreement and the contract documents. All executed change orders shall be incorporated into previously defined deliverables.

42.3 With respect to any change orders issued in accordance with this Article, the Seller shall be compensated for work performed under a change order according to the hourly change order rate specified in the attached Exhibit A, which is incorporated herein. If there is a service that is not defined in the change order rate, the Seller and the State will negotiate the rate. The Seller agrees that each change order rate shall be a "fully loaded" rate, that is, it includes the cost of all materials, travel expenses, per diem, and all other expenses and incidentals incurred by the Seller in the performance of the change order. The Seller shall invoice the Purchaser upon acceptance by the Purchaser of all work documented in the change order, and the Purchaser shall pay invoice amounts on the terms set forth in this Agreement.

42.4 Upon agreement of the parties to enter into a change order, the parties will execute such a change order setting forth in reasonable detail the work to be performed thereunder, the revisions necessary to the specifications or performance schedules of any affected project work plan, and the estimated number of professional services hours that will be necessary to implement the work contemplated therein. The price of the work to be performed under any change order will be determined based upon the change order rate; however, the change order will be issued for a total fixed dollar amount and may not be exceeded regardless of the number of hours actually expended by the Seller to complete the work required by that change order. The project work plan will be revised as necessary.

42.5 The Seller will include in the progress reports delivered under this Agreement the status of work performed under all then current change orders.

42.6 In the event the Seller and the State enter into a change order which increases or decreases the time required for the performance of any part of the work under this Agreement, the Seller shall submit to the Purchaser a revised version of the project work plan clearly indicating all changes at least five (5) working days prior to implementing any such changes.

42.7 The Purchaser shall promptly review all revised project work plans submitted under this Agreement and shall notify the Seller of its approval or disapproval, in whole or in part, of the proposed revisions, stating with particularity all grounds for any disapproval, within ten (10) working days of receiving the revisions from the Seller. If the Purchaser fails to respond in such

time period or any extension thereof, the Purchaser shall be deemed to have approved the revised project work plan.

ARTICLE 43 RETAINAGE

To secure the Seller's performance under this Agreement, the Seller agrees that the Purchaser shall hold back as retainage fifteen percent (15%) of each amount payable, including amounts payable under Change Orders, under this Agreement. The retainage amount will continue to be held until final acceptance of the system by the State and the expiration of the warranty period.

ARTICLE 44 PERSONNEL ASSIGNMENT GUARANTEE

Seller guarantees that the personnel assigned to this project will remain a part of the project throughout the duration of the Agreement, as long as the personnel are employed by the Seller and are not replaced by Seller pursuant to the third paragraph of the Article herein titled "Employment Status." Seller further agrees that the assigned personnel will function in the capacity for which their services were acquired throughout the life of the Agreement, and any failure by Seller to so provide these persons shall entitle the State to terminate this Agreement for cause. Seller agrees to pay the Purchaser fifty percent (50%) of the total contract amount if any of the assigned personnel is removed from the project prior to the ending date of the contract for reasons other than departure from Seller's employment or replacement by Seller pursuant to the third paragraph of the Article herein titled "Employment Status." Subject to the State's written approval, the Seller may substitute qualified persons in the event of the separation of the incumbents therein from employment with Seller or for other compelling reasons that are acceptable to the State and may assign additional staff to provide technical support to Purchaser. The replacement personnel shall have equal or greater ability, experience, and qualifications than the departing personnel and shall be subject to the prior written approval of the Purchaser. The Seller shall not permanently divert any staff member from meeting work schedules developed and approved under this Agreement, unless approved in writing by the Purchaser. In the event of Seller personnel loss or redirection, the services performed by the Seller shall be uninterrupted and the Seller shall report in required status reports its efforts and progress in finding replacements and the effect of the absence of those personnel.

ARTICLE 45 LIQUIDATED DAMAGES

It is agreed by the parties hereto that time is of the essence and that in the event of a delay in the delivery and installation deadlines or delay in the satisfactory completion and acceptance of the services provided for herein, damage shall be sustained by Purchaser. In the event of a delay as described herein, Seller shall pay Purchaser, within five (5) calendar days from the date of receipt of notice, fixed and liquidated damages of $150.00 dollars per day for each calendar day of delay caused by Seller. Purchaser may offset amounts due it as liquidated damages against any monies due Seller under this Agreement. Purchaser will notify Seller in writing of any claim for liquidated damages pursuant hereto on or before the date Purchaser deducts such sums from

money payable to Seller. Any liquidated damages assessed are in addition to and not in limitation of any other rights or remedies of Purchaser.

ARTICLE 46 PERFORMANCE BOND

As a condition precedent to the formation of this Agreement, the Seller must provide a performance bond as herein described. To secure the Seller's performance, the Seller shall procure, submit to the State with this executed Agreement, and maintain in effect at all times during the course of this Agreement a performance bond in the total amount of this Agreement. The bond shall be accompanied by a duly authenticated or certified document evidencing that the person executing the bond is a licensed Mississippi agent for the bonding company. This certified document shall identify the name and address of the person or entity holding the performance bond and shall identify a contact person to be notified in the event the State is required to take action against the bond. The term of the performance bond shall be concurrent with the term of this Agreement, with the exception of post-warranty maintenance and support, and shall not be released to Seller until final acceptance of all products and deliverables required herein or until the warranty period, if any, has expired, whichever occurs last. If applicable, and at the State's sole discretion, the State may, at any time during the warranty period, review Seller's performance and performance of the products/services delivered and determine that the Seller's performance bond may be reduced or released prior to expiration of the full warranty period. The performance bond shall be procured at Seller's expense and be payable to the Purchaser. The cost of the bond may be invoiced to the Purchaser after project initiation only if itemized in the Seller's cost proposal and in the attached Exhibit A. Prior to approval of the performance bond, the State reserves the right to review the bond and require Seller to substitute an acceptable bond in such form as the State may reasonably require. The premiums on such bond shall be paid by Seller. The bond must specifically refer to this Agreement and shall bind the surety to all of the terms and conditions of this Agreement. If the Agreement is terminated due to Seller's failure to comply with the terms thereof, Purchaser may claim against the performance bond.

ARTICLE 47 ESCROW OF SOURCE CODE

47.1 With the execution of this Agreement, the Seller shall place and maintain a current copy of the data dictionary, documentation, object code, and source code in escrow and shall furnish Purchaser with a copy of the escrow agreement and the name and address of the agent. The escrow agreement shall authorize the escrow agent to release, at no cost to Purchaser, the data dictionary, documentation, object code, and source code to Purchaser if and when the Purchaser is deemed to have a right under this Article. The Seller shall pay all costs of providing and maintaining the escrow agreement, including the fees of the escrow agent. The copy of the source code placed in escrow shall be reproduced and maintained on magnetic tape or disk using a commonly accepted data recording protocol. Program documentation sufficient to allow a competent programmer to use and maintain the source code programs must accompany the source code. When a change is made to the object code or source code by or on behalf of the

Seller during the term of the escrow agreement, the revised code, including the change, shall be delivered to the escrow agent not later than thirty (30) calendar days after the change is effected by or on behalf of the Seller.

47.2 Provided that the Purchaser is not then in substantial default under this Agreement, the Seller shall provide to Purchaser, at no cost and within ten (10) calendar days after receipt of Purchaser's written request for it, one (1) complete copy of the data dictionary, documentation, object code, and source code used in the preparation of the software and custom modifications to the source code and object code as a result of this Agreement, brought up to date as of the date of delivery of such source code to Purchaser, upon the occurrence of any of the following events: (a) any or all material part of the source code or object code is generally made available, with or without additional cost, to other users of comparable software; or (b) the Seller's or the software manufacturer's cessation, for any reason, to do business; or (c) the Seller or the software manufacturer discontinues maintenance of the software; or (d) bankruptcy, receivership, insolvency, reorganization, dissolution, liquidation, or other similar proceedings are instituted by or against the Seller or the software manufacturer.

For the faithful performance of the terms of this Agreement, the parties have caused this Agreement to be executed by their undersigned representatives.

State of Mississippi, Department of Information Technology Services, on Behalf of Mississippi Department of Education

By: _____
Authorized Signature

Printed Name: David L. Litchliter

Title: Executive Director

Date: _____

INSERT VENDOR NAME

By: _____
Authorized Signature

Printed Name: _____

Title: _____

Date: _____

Mississippi Department of Education

By: _____
Derrick Lindsay
Chief Information Officer

Date: _____

EXHIBIT A

PROJECT NUMBER 37388
SOFTWARE LICENSE AND APPLICATION SERVICE PROVIDER AGREEMENT
BETWEEN
INSERT VENDOR NAME
AND
MISSISSIPPI DEPARTMENT OF INFORMATION TECHNOLOGY SERVICES
AS CONTRACTING AGENT FOR THE
MISSISSIPPI DEPARTMENT OF EDUCATION

This Software License and Application Service Provider Agreement (hereinafter referred to as "Agreement") is entered into by and between, INSERT VENDOR NAME, a INSERT STATE OF INCORPORATION corporation having its principal place of business at INSERT VENDOR ADDRESS (hereinafter referred to as "Licensor"), and Mississippi Department of Information Technology Services having its principal place of business at 301 North Lamar Street, Suite 508, Jackson, Mississippi 39201 (hereinafter referred to as "ITS"), as contracting agent for the Mississippi Department of Education, located at 359 North West Street, Jackson, Mississippi 39201 (hereinafter referred to as "Licensee" and/or "MDE"). ITS and MDE are sometimes collectively referred to herein as "State."

WHEREAS, MDE, pursuant to Request for Proposals ("RFP") No. 3590 requested proposals for the services of a contractor to host and maintain an Application Service Provider ("ASP") solution for a Statewide Student Information System; and

WHEREAS, Licensor was the successful proposer in an open, fair and competitive procurement process to provide the software and services described herein;

NOW THEREFORE, in consideration of the mutual understandings, promises and agreements set forth, the parties hereto agree as follows:

ARTICLE 1 DEFINITIONS

1.1 "Active User" means MDE employees, Mississippi school district employees and other MDE designated users actively participating on the system in any given month of operation, who shall be bound to the terms and conditions of this Agreement. Licensor does not impose a limit on the number of Active Users accessing or registering to use the system.

1.2 "Available Date" means the date upon which Licensor notifies MDE that the Software may be accessed on the Licensor's ASP server and MDE may begin acceptance testing.

1.3 "Content" means any content provided by or through Active Users for use with the Software.

1.4 "Documentation" means the published user and technical manuals and documentation that Licensor makes generally available for the Software; the help files included within the Software, and any files containing presentation materials or manuals or other related materials to train and educate Licensee and the Active Users on the use of the Software.

1.5 "Enhancements" means the corrections, updates, upgrades or new versions of the Software or Documentation that Licensor may provide to Licensee under this Agreement.

1.6 "Licensee" means the Mississippi Department of Education, its employees, Mississippi school district employees, other MDE designated users and any third party consultants or outsourcers engaged by MDE who have a need to know and who shall be bound by the terms and conditions of this Agreement.

1.7 "Licensor" means INSERT VENDOR NAME, and its successors and assigns.

1.8 "Products" means the Software, Documentation, Corrections, Enhancements and any copy of the Software, Documentation, Corrections, or Enhancements provided by the Licensor.

1.9 "Services" means any on-line user access, customizations, interface development, consulting, education, ASP installation, system administration, training, maintenance, support, and Help Desk services provided by Licensor to Licensee.

1.10 "Software" means the machine-readable object code version of the computer programs whether embedded on disc, tape or other media used for the management of the web-based Statewide Student Information System and Supported Interfaces (and any Documentation and help files within the Software), including any Enhancements provided pursuant to the maintenance and support terms identified herein.

1.11 "Software Error" means a reproducible defect or combination thereof in the Software that results in a failure of the Software when used in accordance with the Documentation. Software Errors do not include those errors caused by (a) Licensee's negligence, (b) any unauthorized modification or alteration Licensee makes to the Software, (c) data that does not conform to Licensor's specified data format, (d) operator error, or (e) use not conforming to the Licensor's supported technical environment specified in the Documentation.

1.12 "Supported Interfaces" means application-based interfaces (API), network protocols, data formats, database schemas, and file formats used in the Software as described in the Documentation.

ARTICLE 2 PERIOD OF PERFORMANCE

2.1 Unless this Agreement is extended by mutual agreement or terminated as prescribed elsewhere herein, this Agreement shall begin on the date it is signed by all parties and shall continue in effect until the Licensor completes all tasks required herein pursuant to the project work plan, including services during the five (5) year hosting term. The web-based Statewide Student Information System, as customized for the State of Mississippi, must be implemented; fully functional; accepted by MDE, and all tasks (excluding hosting) required herein, including but not limited to development of required interfaces and training, completed on or before June 30, 2011, unless a change in this date is mutually agreed to in writing by the State and the Licensor. At the end of the five (5) year initial ASP services term, the ASP services may, upon the written agreement of the parties, be renewed under the same terms and conditions for two additional one (1) year terms. One hundred and eighty (180) days prior to the expiration of the initial hosting term or any renewal hosting term of this Agreement, Licensor shall notify MDE and ITS of the impending expiration and MDE shall have sixty (60) days in which to notify Licensor of its intention to either renew or cancel the ASP services.

2.2 This Agreement will become a binding obligation on the State only upon the issuance of a valid purchase order by MDE following contract execution and the issuance by ITS of the CP-1 Acquisition Approval Document.

ARTICLE 3 SCOPE OF SERVICES

3.1 The Licensor agrees to provide to MDE an ASP based Statewide Student Information System and Services and associated deliverables required to provide, host and maintain a web based application for MDE as described in this Agreement. While the scope of work for this project is defined by the contract documents set forth herein in the article titled "Entire Agreement", a summary of such work is outlined in Article 3.5 below.

3.2 The Licensor acknowledges that MDE intends to be actively involved in the day-to-day progress of the project. The Licensor agrees to (a) obtain MDE's approval of all tasks and the time schedule for completion of said tasks prior to commencing performance, if not already contained in the approved project work plan; (b) make available to the State project team members all project work papers and work-in-progress for review; (c) ensure that the Licensor Project Manager works closely together with the State Project Manager, (d) provide MDE access to the host website; (e) meet with MDE on a regular basis at a mutually agreeable time, and as otherwise requested by MDE, to discuss the status of the project, and (f) if required by MDE, submit written project status reports.

3.3 The parties understand and agree that the project shall be structured with interim deliverables as set forth in the agreed upon project work plan so as to allow MDE an opportunity to accept or reject the deliverables, including but not limited to, specifications, requirement definitions, process designs, data analyses, web layouts, screen layouts, and report layouts. The actual customizations shall not begin until after MDE has communicated its conceptual approval

of the results the Licensor plans to provide. MDE shall have ten (10) business days to review interim materials, which review period can only be reduced by mutual agreement of the Licensor and MDE.

3.4 It is understood by the parties that the project work plan must be in place within fifteen (15) business days of execution of this Agreement and prior to any other work being performed. Once this mutually agreed upon project work plan, which will identify specific time frames and deliverable target dates for this project, has been developed, it will be incorporated into and made a part of this Agreement. The dates in the project work plan will define the agreed upon period of performance. The parties acknowledge that the project work plan will evolve and change from time to time upon the mutual written agreement of both parties. The parties agree that the deliverables and schedule set forth in the latest version of the project work plan will take precedence over any prior plans.

3.5 Licensor shall be responsible for the following:

A. Ensuring that all deliverables are complete and accepted by MDE pursuant to the mutually agreed upon project work plan;
B. Ensuring that the host site complies with PriorityOne of the World Wide Web Consortium's (W3C's) Web Accessibility Initiative and guidelines in Section 508 of the Rehabilitation Act that are not covered in W3C Priority;
C. Ensuring that the site is accessible through MDE's published universal resource locator ("URL") rather than through Licensor's site address;
D. Reviewing with MDE the Content a minimum of once a quarter to ensure that the Content remains timely and accurate and reaching an agreement with MDE as to reasonable timelines for implementing Content updates delivered to the Licensor that will be posted on the site;
E. Tracking date sensitive items to ensure timely updates;
F. All Content provided by the Licensee and collected by the Software shall remain the sole and exclusive property of the Licensee. Upon the termination or expiration of this Agreement, Licensor shall provide such Content in its possession to the Licensee pursuant to a mutually agreed upon release schedule;
G. Working with MDE to achieve access rates that meet MDE's needs;
H. Providing security for the host site that is agreeable to MDE with Licensor responsible for all necessary equipment and software related to security;
I. Maintaining the accessibility of the site twenty-four (24) hours a day, seven (7) days a week at an uptime rate of 99% or greater, subject to the limitations set forth in this Agreement, including but not limited to, those in Article 4.4;
J. Completing daily backups of the site;
K. Notifying MDE at least three (3) business days prior to any anticipated service interruption, with said notice containing a general description of the reason for the service

interruption;

L. Proposing and adhering to a disaster recovery plan and providing access to such plan to the State, all at Licensor's expense;

M. Participating with MDE in disaster recovery planning and testing based on a mutually agreed upon schedule;

N. Maintaining the confidentiality of the data entered;

O. Providing MDE access to all of the technical information concerning operation of the site, including but not limited to, server specifications, Internet connection information, personnel requirements and software implementations;

P. Identifying any commercially available software, by vendor and version number, integrated into the Products and describing the particular functionality of any software that is proprietary to the Licensor;

Q. Maintaining the host site, with the cost for such support, maintenance, and hosting for years following the initial five (5) year period not increasing annually beyond five percent (5%) or the percent increase in the consumer price index for all Urban Consumers, US City Average (C.P.I.-U) for the preceding year, whichever is less;

R. Providing 24x7x365 support of the web site, including sub-domain support;

S. Providing redundant internet connections;

T. Providing Dual T1 or greater connectivity;

U. Providing FTP and remote configuration access;

V. Providing SSL secure server support;

W. Providing monthly reports containing line utilization, site availability statistics, network usage, security user access reports and system performance data to MDE;

X. Maintaining sufficient bandwidth and server capacity to meet MDE and Active Users' demand as it may fluctuate and increase during the term of this Agreement, and

Y. Ensuring that upon termination or expiration of this Agreement that transition of the site from the Licensor to MDE or to a successor host will be accomplished at no expense to MDE, and with minimal interruption of the site's accessibility and insignificant changes in the site's appearance and functionality.

3.6 In the event Licensor creates any revisions to or upgrades of the system, Licensor shall provide Licensee thirty (30) days written notification of such revision or upgrade, and shall, upon request of Licensee, furnish such revision or upgrade to Licensee free of charge as part of the ASP fees.

ARTICLE 4 SCOPE OF LICENSE AND HOSTING SERVICES

4.1 Subject to the terms and conditions of this Agreement, Licensor hereby grants to Licensee a non-exclusive and non-transferable license to access the Software over the Internet and to use it for Licensee's business operations and use it on the Licensor's host server for the initial term of the Agreement and any subsequent renewal hosting terms in accordance with, and subject to, the terms and conditions set forth in this Agreement. Licensee and Active Users are

granted access to the Software, Products and Services twenty-four (24) hours a day, seven (7) days a week, three hundred and sixty five (365) days a year, subject to regularly scheduled maintenance and required repairs. The terms and conditions of this Agreement will apply to any Enhancements or additional Software Products Licensee may procure from Licensor.

4.2 Licensor will provide Licensee storage space on and access to Licensor's Software via the Internet and provide Internet access to the Software to the Active Users through Licensor's site ("ASP Services").

4.3 In connection with the ASP Services, Licensor will provide and maintain all Software and hardware, including, but not limited to, the server hardware and software, telecommunications hardware and software, security hardware and software and other software that is reasonably necessary to operate and maintain the Software.

4.4 The Software will be accessible at least ninety nine percent (99%) of the time, twenty-four (24) hours a day, seven (7) days a week, except for scheduled maintenance and required repairs, and except for any loss or interruption of the ASP Services due to causes beyond the control of Licensor. In the event that MDE or an Active User is unable to achieve the 99% application availability during any given month, excluding scheduled maintenance, required repairs, and unavailability due to causes beyond the control of Licensor, the Licensor shall reimburse MDE twenty five percent (25%) of the monthly ASP hosting fees for each twenty-four (24) hour day during which there were any incidents of unavailability. Licensor shall maintain the server at a secured location with restricted access.

4.5 Licensor shall provide the Licensee with its standard managed firewall service, which shall enable secure delivery of Licensor's application services using fully redundant hardware-based firewalls. Licensor's managed firewall service will be available twenty-four (24) hours a day, seven (7) days a week.

4.6 The use of the Software by Active Users will be governed solely by the terms and conditions of this Agreement.

4.7 Licensor acknowledges that the Content is and shall remain the sole and exclusive property of Licensee. Further, Licensor acknowledges that the Content may contain valuable trade secrets of Licensee and Licensor agrees to maintain the confidentiality of the Content and shall not make the Content publicly available except as may be necessary in performing the ASP Services.

4.8 Licensee acknowledges that the Software Products shall remain the exclusive property of Licensor. Licensee agrees that except as noted herein, it will not otherwise copy, translate,

modify, adapt, decompile, disassemble or reverse engineer any of the Software without the prior written consent of Licensor.

ARTICLE 5 DELIVERY; RISK OF LOSS, AND ACCEPTANCE

5.1 Licensor shall deliver, install, and make available the Software and Documentation to the Licensor's hosting environment, except as otherwise specified, and pursuant to the delivery schedule mutually agreed to by the parties.

5.2 Licensor shall assume and bear the entire risk of loss and damage to the Products from any cause whatsoever while in transit and at all times throughout Licensor's possession thereof.

5.3 During the project initiation, Licensor and MDE will develop a mutually agreed upon project plan including the division of responsibility between MDE's staff and Licensor's staff. It is understood by the parties that the project work plan must be in place prior to any other work being performed. Once this mutually agreed upon project plan, which will identify specific time frames and deliverable target dates for this project, has been developed, it will be incorporated into and made a part of this Agreement. The dates in the project plan will define the agreed upon period of performance. The parties acknowledge that the project plan will evolve and change from time to time upon the mutual written agreement of both parties. The parties agree that the deliverables and schedule set forth in the latest version of the project plan will take precedence over any prior plans.

5.4 Deliverable Acceptance Testing: Licensor shall provide all documentation for the software being tested before acceptance testing will begin. MDE shall have a minimum of ten (10) business days to review each deliverable and to either notify Licensor of acceptance or to provide Licensor a detailed list of deficiencies that must be remedied prior to payment being made. In the event the MDE notifies the Licensor of deficiencies, the Licensor shall correct such deficiencies within ten (10) business days, unless the parties mutually agree to a longer period of time.

5.5 Pilot Testing: It is understood and agreed that MDE will conduct a three (3) month Pilot Test Period of the system that will include selected school districts located in various parts of the State of Mississippi, to ensure the system operates according to the specifications outlined in RFP No. 3590 in a live, day-to-day business environment. The Licensor must provide technical staff onsite to assist with Pilot Testing as requested by MDE. All defects must be corrected by Licensor within ten (10) business days. MDE will notify Licensor in writing when the system has completed Pilot testing and is ready for Final System Acceptance Testing.

5.6 Final System Acceptance Testing: After completion of Pilot Testing, MDE shall have thirty (30) business days to evaluate and conduct the final acceptance testing of the Software to confirm that it performs without any defects and performs pursuant to the specifications set forth

in RFP No. 3590 and the Licensor's Proposal, as accepted by MDE, in response thereto. Licensor shall participate, as agreed upon by both parties, in the acceptance testing of the system by providing technical staff at MDE's location to provide assistance in demonstrating all functions of the system. MDE's official representative must sign off on each application to ensure that the applications meet the functional and technical requirements. In the event that one (1) or more applications supplied by Licensor are not accepted, the Licensor shall correct the deficiencies or provide at its own expense whatever software that may be required to meet the acceptance criteria within ten (10) business days or a mutually agreed upon time period. In the event the system fails to perform as stated herein, MDE shall immediately notify Licensor. The Licensor, at Licensor's expense, shall correct defects identified by MDE within ten (10) business days, or such other period as the parties may agree upon. The thirty (30) business day Final System Acceptance testing period will be extended by system down-time. In the event Licensor is unable to repair or replace the defective Software, MDE may terminate this Agreement pursuant to the Termination Article herein. "Final Acceptance" shall mean written notice from MDE that it has accepted the system upon successful completion of the thirty (30) business day period during which time the system conformed in all material respects to the applicable specifications with no additional defects found. The parties agree that MDE reserves the right to reject the system.

ARTICLE 6 CONSIDERATION AND METHOD OF PAYMENT

6.1 The total compensation to be paid to the Licensor by MDE for all development, maintenance and ASP services, customizations, products, travel, performances and expenses under this Agreement shall not exceed the specified sum of $INSERT TOTAL COMPENSATION, and shall be payable as set forth in the Payment Schedule attached hereto as Exhibit A.

6.2 Licensor shall submit invoices with the appropriate documentation to MDE monthly for any month in which ASP services and/or other Services are rendered. Licensor shall submit invoices and supporting documentation to MDE electronically during the term of this Agreement using the processes and procedures identified by the State. MDE agrees to make payment in accordance with Mississippi law on "Timely Payments for Purchases by Public Bodies", Section 31-7-301, et seq. of the 1972 Mississippi Code Annotated, as amended, which generally provides for payment of undisputed amounts by MDE within forty-five (45) days of receipt of the invoice. Licensor understands and agrees that MDE is exempt from the payment of taxes. All payments shall be in United States currency. Payments by state agencies using the Statewide Automated Accounting System ("SAAS") shall be made and remittance information provided electronically as directed by the State. These payments by SAAS agencies shall be deposited into the bank account of the Licensor's choice. No payment, including final payment, shall be construed as acceptance of defective or incomplete work, and the Licensor shall remain responsible and liable for full performance.

6.3 Acceptance by the Licensor of the last payment due from MDE under this Agreement shall operate as a release of all claims for money against the State by the Licensor and any subcontractors or other persons supplying labor or materials used in the performance of the work under this Agreement.

ARTICLE 7 WARRANTY

7.1 Licensor represents and warrants that it has the right to license the Products provided under this Agreement.

7.2 Licensor represents and warrants that the Products provided by Licensor shall meet or exceed the minimum specifications set forth in RFP No. 3590 and Licensor's Proposal, as accepted by the State, in response thereto.

7.3 During the term of this Agreement, the Licensor represents and warrants that all deliverables shall be free from any defect, deficiency, faultiness, imperfection, inadequacy, incompleteness or other condition (collectively referred to herein as "Defect") which would render any such deliverable inoperable in any way or which would prevent full performance in accordance with this Agreement. This warranty includes, without limitation, correction of errors, design deficiencies, performance deficiencies, and incorrect or defective Documentation, including those found during acceptance testing, implementation, and the warranty period. Acceptance testing shall not in any way relieve the Licensor of its responsibilities to correct any Defect during the warranty period. The Licensor shall repair any Defect at no cost to the State within ten (10) business days of receiving notice of the Defect from the State, unless MDE consents in writing to a longer period of repair time. In the event Licensor is unable to repair or replace the Software within the mutually agreed upon time frame after receipt of notice of the Defect, MDE shall be entitled to a full refund of fees paid and shall have the right to terminate this Agreement in whole or in part as provided for in the Termination Article herein. Licensee's rights hereunder are in addition to any other rights Licensee may have.

7.4 During the term of this Agreement, the Licensor represents and warrants that its Services hereunder shall be performed by competent personnel and shall be of professional quality consistent with generally accepted industry standards for the performance of such Services and shall comply in all respects with the requirements of this Agreement. For any breach of this warranty, Licensor shall perform the Services again, at no cost to the State, or if Licensor is unable to perform the Services as warranted, Licensor shall reimburse the State the fees paid to Licensor for the unsatisfactory Services.

7.5 Licensor represents and warrants that neither the Software, nor Enhancements shall contain a disabling code, lockup program or device. Licensor further agrees that it will not, under any circumstances including enforcement of a valid contract right, (a) install or trigger a lockup program or device, or (b) take any step which would in any manner interfere with Licensee's

licensed use of the Software, or Enhancements and/or which would restrict Licensee from accessing its data files or in any way interfere with the transaction of Licensee's business. For any breach of this warranty, Licensor at its expense shall, within ten (10) business days after receipt of notification of the breach, deliver Products to Licensee that are free of such disabling code, lockup program or device.

7.6 Licensor represents and warrants that neither the Software, nor Enhancements delivered to Licensee contain a computer virus. For purposes of this provision, a computer virus shall be defined as code intentionally inserted in the Software or Enhancements that will damage or destroy Licensee's applications or data. For any breach of this warranty, Licensor at its expense shall, within five (5) business days after receipt of notification of the breach, deliver Products to Licensee that are free of any virus, and shall be responsible for repairing, at Licensor's expense, any and all damage done by the virus to Licensee's site.

7.7 The Licensor represents and warrants that, upon completion of the project, the Licensor, and all subcontractors, if any, shall convey to MDE copies of all interim reports, cost records, data collection forms, and any working papers that support the final acceptance.

7.8 Licensor represents and warrants that it has obtained all necessary rights to permit use of the graphics on the site and that the Licensor shall provide MDE with evidentiary proof of graphic licenses and releases. Further, the Licensor represents and warrants that all Licensor-supplied graphics and content contains no scandalous or libelous material.

7.9 The Licensor represents and warrants that the deliverables provided to MDE under this Agreement, and their use by Active Users, will not infringe or constitute an infringement of any copyright, patent, trademark, servicemark, trade secret or other proprietary right of any person or entity. Licensee agrees that it will promptly notify Licensor in writing of any such claim or action of which it has knowledge, and that it will cooperate fully in the defense and investigation of the claim by supplying Licensor all relevant information currently available and in its possession, all at Licensor's expense. Licensor shall, to the extent authorized by Mississippi law, have sole control over the defense or settlement of any such claim or action. Licensor, at its own expense, shall defend or settle any and all infringement actions filed against Licensor or the State which involve the deliverables or other items provided under this Agreement and shall pay all settlements, as well as all costs, attorney fees, damages and judgment finally awarded against the State. If, in any such suit arising from such claim, the continued use of the items for the purpose intended is enjoined or threatened to be enjoined by any court of competent jurisdiction, Licensor shall, at its expense: (a) procure for the State the right to continue using such items, or (b) modify or replace them with non-infringing items with equivalent functionality, or, to the extent (a) or (b) cannot be done despite Licensor's commercially reasonable efforts, (c) refund to the State the fees previously paid by the State for the infringing Products. Said refund shall be paid within ten (10) business days of notice to the State to discontinue said use. In addition to the

foregoing, the Licensor shall indemnify the State in accordance with the provisions of Article 18 herein.

7.10 Licensor represents and warrants that the host site provided by the Licensor shall be reasonably expandable and scalable so MDE can add and support additional business functions and users over time. It is understood and agreed that any standard revisions, enhancements, improvements, and upgrades to the licensed Software and host site equipment during the term of this Agreement, including operating system, database management system, and other software, shall be provided by Licensor to MDE at no additional cost to MDE.

7.11 Licensor represents and warrants that it presently has and will continue to maintain, at its own expense, throughout the term of this Agreement, valid licenses for all software, trademarks, service marks, patents and copyrighted material and any other proprietary information of a third party that it will deploy in support of all products Licensor uses in the performance of this Agreement.

7.12 Licensor represents and warrants that it will ensure its compliance with the Mississippi Employment Protection Act, Section 71-11-1, et seq. of the Mississippi Code Annotated (Supp2008), and will register and participate in the status verification system for all newly hired employees. The term "employee" as used herein means any person that is hired to perform work within the State of Mississippi. As used herein, "status verification system" means the Illegal Immigration Reform and Immigration Responsibility Act of 1996 that is operated by the United States Department of Homeland Security, also known as the E-Verify Program, or any other successor electronic verification system replacing the E-Verify Program. Licensor agrees to maintain records of such compliance and, upon request of the State, to provide a copy of each such verification to the State. Licensor further represents and warrants that any person assigned to perform services hereunder meets the employment eligibility requirements of all immigration laws of the State of Mississippi. Licensor understands and agrees that any breach of these warranties may subject Licensor to the following: (a) termination of this Agreement and ineligibility for any state or public contract in Mississippi for up to three (3) years, with notice of such cancellation/termination being made public, or (b) the loss of any license, permit, certification or other document granted to Licensor by an agency, department or governmental entity for the right to do business in Mississippi for up to one (1) year, or (c) both. In the event of such termination/cancellation, Licensor would also be liable for any additional costs incurred by the State due to contract cancellation or loss of license or permit.

7.13 Licensor represents and warrants that the system provided pursuant to this Agreement will pass both internal security audits and independent security audits. For any breach of the preceding warranty at any time during which the system is covered by warranty and/or software support, Licensor shall, at its own expense and at no cost to Licensee, remediate any defect,

anomaly or security vulnerability in the system by repairing and/or replacing any and all components of the system necessary in order for the system to be secure.

7.14 Licensor represents and warrants that no official or employee of Licensee or of ITS, and no other public official of the State of Mississippi who exercises any functions or responsibilities in the review or approval of the undertaking or carrying out of the project shall, prior to the completion of said project, voluntarily acquire any personal interest, direct or indirect, in this Agreement. The Licensor warrants that it has removed any material conflict of interest prior to the signing of this Agreement, and that it shall not acquire any interest, direct or indirect, which would conflict in any manner or degree with the performance of its responsibilities under this Agreement. The Licensor also warrants that in the performance of this Agreement no person having any such known interests shall be employed**.**

7.15 The Licensor represents and warrants that no elected or appointed officer or other employee of the State of Mississippi, nor any member of or delegate to Congress has or shall benefit financially or materially from this Agreement. No individual employed by the State of Mississippi shall be admitted to any share or part of the Agreement or to any benefit that may arise therefrom. The State of Mississippi may, by written notice to the Licensor, terminate the right of the Licensor to proceed under this Agreement if it is found, after notice and hearing by the ITS Executive Director or his/her designee, that gratuities in the form of entertainment, gifts, jobs, or otherwise were offered or given by the Licensor to any officer or employee of the State of Mississippi with a view toward securing this Agreement or securing favorable treatment with respect to the award, or amending or making of any determinations with respect to the performing of such contract, provided that the existence of the facts upon which the ITS Executive Director makes such findings shall be in issue and may be reviewed in any competent court. In the event this Agreement is terminated under this article, the State of Mississippi shall be entitled to pursue the same remedies against the Licensor as it would pursue in the event of a breach of contract by the Licensor, including punitive damages, in addition to any other damages to which it may be entitled at law or in equity.

ARTICLE 8 EMPLOYMENT STATUS

8.1 Licensor shall, during the entire term of this Agreement, be construed to be an independent contractor. Nothing in this Agreement is intended to nor shall be construed to create an employer-employee relationship, or a joint venture relationship.

8.2 Licensor represents that it is qualified to perform the duties to be performed under this Agreement and that it has, or will secure, if needed, at its own expense, applicable personnel who shall be qualified to perform the duties required under this Agreement. Such personnel shall not be deemed in any way, directly or indirectly, expressly or by implication, to be employees of Licensee.

8.3 Any person assigned by Licensor to perform the Services hereunder shall be the employee of Licensor, who shall have the sole right to hire and discharge its employee. Licensee may, however, direct Licensor to replace any of its employees under this Agreement.

8.4 Licensor shall pay when due, all salaries and wages of its employees and it accepts exclusive responsibility for the payment of federal income tax, state income tax, social security, unemployment compensation and any other withholdings that may be required. Neither Licensor nor employees of Licensor are entitled to state retirement or leave benefits.

ARTICLE 9 BEHAVIOR OF EMPLOYEES/SUBCONTRACTORS

Licensor will be responsible for the behavior of all its employees and subcontractors while on the premises of any Licensee location. Any employee or subcontractor acting in a manner determined by the administration of that location to be detrimental, abusive or offensive to any of the staff and/or students will be asked to leave the premises and may be suspended from further work on the premises. All Licensor employees and subcontractors who will be working at such locations shall be covered by Licensor's comprehensive general liability insurance policy.

ARTICLE 10 MODIFICATION OR RENEGOTIATION

This Agreement may be modified only by written agreement signed by the parties hereto, and any attempt at oral modification shall be void and of no effect. The parties agree to renegotiate the Agreement if federal and/or state revisions of any applicable laws or regulations make changes in this Agreement necessary.

ARTICLE 11 AUTHORITY, ASSIGNMENT AND SUBCONTRACTS

11.1 In matters of proposals, negotiations, contracts, and resolution of issues and/or disputes, the parties agree that Licensor represents all contractors, third parties, and/or subcontractors Licensor has assembled for this project. The Licensee is required to negotiate only with Licensor, as Licensor's commitments are binding on all proposed contractors, third parties, and subcontractors.

11.2 Neither party may assign or otherwise transfer this Agreement or its obligations hereunder without the prior written consent of the other party, which consent shall not be unreasonably withheld. Any attempted assignment or transfer of its obligations without such consent shall be null and void. This Agreement shall be binding upon the parties' respective successors and assigns.

11.3 Licensor must obtain the written approval of MDE before subcontracting any portion of this Agreement. No such approval by MDE of any subcontract shall be deemed in any way to provide for the incurrence of any obligation of MDE in addition to the total fixed price agreed upon in this Agreement. All subcontracts shall incorporate the terms of this Agreement and shall be subject to the terms and conditions of this Agreement and to any conditions of approval that

MDE may deem necessary.

11.4 Licensor represents and warrants that any subcontract agreement Licensor enters into shall contain a provision advising the subcontractor that the subcontractor shall have no lien and no legal right to assert control over any funds held by the Licensee, and that the subcontractor acknowledges that no privity of contract exists between the Licensee and the subcontractor and that the Licensor is solely liable for any and all payments which may be due to the subcontractor pursuant to its subcontract agreement with the Licensor. The Licensor shall indemnify and hold harmless the State from and against any and all claims, demands, liabilities, suits, actions, damages, losses, costs and expenses of every kind and nature whatsoever arising as a result of Licensor's failure to pay any and all amounts due by Licensor to any subcontractor, third party licensor, materialman, laborer or the like.

11.5 All subcontractors shall be bound by any negotiation, arbitration, appeal, adjudication or settlement of any dispute between the Licensor and the Licensee, where such dispute affects the subcontract.

ARTICLE 12 AVAILABILITY OF FUNDS

It is expressly understood and agreed that the obligation of MDE to proceed under this Agreement is conditioned upon the appropriation of funds by the Mississippi State Legislature and the receipt of state and/or federal funds for the performances required under this Agreement. If the funds anticipated for the fulfillment of this Agreement are not forthcoming, or are insufficient, either through the failure of the federal government to provide funds or of the State of Mississippi to appropriate funds, or if there is a discontinuance or material alteration of the program under which funds were available to MDE for the payments or performance due under this Agreement, MDE shall have the right to immediately terminate this Agreement, in whole or in part, without damage, penalty, cost or expense to MDE of any kind whatsoever, except for payment for work completed by Licensor and accepted by MDE prior to termination. The effective date of termination shall be as specified in the notice of termination. MDE shall have the sole right to determine whether funds are available for the payments or performances due under this Agreement.

ARTICLE 13 TERMINATION

12.1 Notwithstanding any other provision of this Agreement to the contrary, this Agreement may be terminated, in whole or in part, as follows: (a) upon the mutual, written agreement of the parties; (b) If either party fails to comply with the terms of this Agreement, the non-defaulting party may terminate the Agreement upon the giving of thirty (30) calendar days written notice unless the breach is cured within said thirty (30) day period; (c) MDE may terminate the Agreement in whole or in part without the assessment of any penalties upon ten (10) calendar days written notice to Licensor if Licensor becomes the subject of bankruptcy, reorganization, liquidation or receivership proceedings, whether voluntary or involuntary, or (d) MDE may

terminate this Agreement in whole or in part for any reason without the assessment of any penalties after giving thirty (30) calendar days written notice specifying the effective date thereof to Licensor. The provisions of this Article 13 do not limit either party's right to pursue any other remedy available at law or in equity.

12.2 In the event MDE terminates this Agreement, Licensor shall receive just and equitable compensation for Services rendered by Licensor and accepted by MDE prior to the termination. Further, upon termination of this Agreement, Licensor shall refund any and all applicable unexpended prorated annual ASP fees previously paid by Licensee.

ARTICLE 14 GOVERNING LAW

This Agreement shall be construed and governed in accordance with the laws of the State of Mississippi and venue for the resolution of any dispute shall be Jackson, Hinds County, Mississippi. Licensor expressly agrees that under no circumstances shall the State be obligated to pay an attorney's fee, prejudgment interest or the cost of legal action to Licensor. Further, nothing in this Agreement shall affect any statutory rights the parties may have that cannot be waived or limited by contract.

ARTICLE 15 WAIVER

Failure of either party hereto to insist upon strict compliance with any of the terms, covenants and conditions hereof shall not be deemed a waiver or relinquishment of any similar right or power hereunder at any subsequent time or of any other provision hereof, nor shall it be construed to be a modification of the terms of this Agreement. A waiver by either party, to be effective, must be in writing, must set out the specifics of what is being waived, and must be signed by an authorized representative of that party.

ARTICLE 16 SEVERABILITY

If any term or provision of this Agreement is prohibited by the laws of the State of Mississippi or declared invalid or void by a court of competent jurisdiction, the remainder of this Agreement shall be valid and enforceable to the fullest extent permitted by law provided that the State's purpose for entering into this Agreement can be fully achieved by the remaining portions of the Agreement that have not been severed.

ARTICLE 17 CAPTIONS

The captions or headings in this Agreement are for convenience only, and in no way define, limit or describe the scope or intent of any provision or Article in this Agreement.

ARTICLE 18 HOLD HARMLESS

To the fullest extent allowed by law, Licensor shall indemnify, defend, save and hold harmless, protect and exonerate Licensee, ITS and the State, its Board Members, officers, employees, agents and representatives from and against any and all claims, demands, liabilities, suits,

actions, damages, losses, costs and expenses of every kind and nature whatsoever, including without limitation, court costs, investigative fees and expenses, attorney fees and claims for damages arising out of or caused by Licensor and/or its partners, principals, agents, employees or subcontractors in the performance of or failure to perform this Agreement.

ARTICLE 19 THIRD PARTY ACTION NOTIFICATION

Licensor shall notify MDE in writing within five (5) business days of Licensor filing bankruptcy, reorganization, liquidation or receivership proceedings or within five (5) business days of its receipt of notification of any action or suit being filed or any claim being made against Licensor or MDE by any entity that may result in litigation related in any way to this Agreement and/or which may affect the Licensor's performance under this Agreement. Failure of the Licensor to provide such written notice to MDE shall be considered a material breach of this Agreement and MDE may, at its sole discretion, pursue its rights as set forth in the Termination Article herein and any other rights and remedies it may have at law or in equity.

ARTICLE 20 AUTHORITY TO CONTRACT

Licensor warrants that it is a validly organized business with valid authority to enter into this Agreement; that entry into and performance under this Agreement is not restricted or prohibited by any loan, security, financing, contractual or other agreement of any kind, and notwithstanding any other provision of this Agreement to the contrary, that there are no existing legal proceedings, or prospective legal proceedings, either voluntary or otherwise, which may adversely affect its ability to perform its obligations under this Agreement.

ARTICLE 21 NOTICE

Any notice required or permitted to be given under this Agreement shall be in writing and personally delivered or sent by electronic means provided that the original of such notice is sent by certified United States mail, postage prepaid, return receipt requested, or overnight courier with signed receipt, to the party to whom the notice should be given at their business address listed herein. ITS' address for notice is: Mr. David L. Litchliter, Executive Director, Mississippi Department of Information Technology Services, 301 North Lamar Street, Suite 508, Jackson, Mississippi 39201. Mississippi Department of Education's address for notice is: Mr. Derrick Lindsay, Chief Information Officer, Mississippi Department of Education, 359 North West Street, Jackson, Mississippi 39201. The Licensor's address for notice is: INSERT VENDOR NOTICE INFORMATION. Notice shall be deemed given when actually received or when refused. The parties agree to promptly notify each other in writing of any change of address.

ARTICLE 22 RECORD RETENTION AND ACCESS TO RECORDS

Licensor shall establish and maintain financial records, supporting documents, statistical records and such other records as may be necessary to reflect its performance of the provisions of this Agreement. The Licensee, ITS, any state or federal agency authorized to audit Licensee, and/or any of their duly authorized representatives, shall have unimpeded, prompt access to this

Agreement and to any of the Licensor's proposals, books, documents, papers and/or records that are pertinent to this Agreement to make audits, copies, examinations, excerpts and transcriptions at the State's or Licensor's office as applicable where such records are kept during normal business hours. All records relating to this Agreement shall be retained by the Licensor for three (3) years from the date of receipt of final payment under this Agreement. However, if any litigation or other legal action, by or for the state or federal government has begun that is not completed at the end of the three (3) year period, or if an audit finding, litigation or other legal action has not been resolved at the end of the three (3) year period, the records shall be retained until resolution.

ARTICLE 23 INSURANCE

Licensor represents that it will maintain workers' compensation insurance as prescribed by law which shall inure to the benefit of Licensor's personnel, as well as comprehensive general liability and employee fidelity bond insurance. Licensor will, upon request, furnish MDE with a certificate of conformity providing the aforesaid coverage.

ARTICLE 24 DISPUTES

Any dispute concerning a question of fact under this Agreement which is not disposed of by agreement of the Licensor and Licensee, shall be decided by the Executive Director of ITS or his/her designee. This decision shall be reduced to writing and a copy thereof mailed or furnished to the parties. Disagreement with such decision by either party shall not constitute a breach under the terms of this Agreement. Such disagreeing party shall be entitled to seek such other rights and remedies it may have at law or in equity.

ARTICLE 25 COMPLIANCE WITH LAWS

Licensor shall comply with, and all activities under this Agreement shall be subject to, all Licensee policies and procedures which Licensor has received copies of, and all applicable federal, state, and local laws, regulations, policies and procedures as now existing and as may be amended or modified. Specifically, but not limited to, Licensor shall not discriminate against any employee nor shall any party be subject to discrimination in the performance of this Agreement because of race, creed, color, sex, age, national origin or disability.

ARTICLE 26 CONFLICT OF INTEREST

Licensor shall notify MDE of any potential conflict of interest resulting from the provision of services to other customers. If such conflict cannot be resolved to MDE's satisfaction, MDE reserves the right to terminate this Agreement.

ARTICLE 27 SOVEREIGN IMMUNITY

By entering into this Agreement with Licensor, the State of Mississippi does in no way waive its sovereign immunities or defenses as provided by law.

ARTICLE 28 CONFIDENTIAL INFORMATION

28.1 Licensor shall treat all Licensee data and information to which it has access by its performance under this Agreement as confidential and shall not disclose such data or information to a third party without specific written consent of Licensee. In the event that Licensor receives notice that a third party requests divulgence of confidential or otherwise protected information and/or has served upon it a validly issued judicial order requiring divulgence of such information, Licensor shall promptly inform Licensee and thereafter respond in conformity with such court order to the extent mandated by state and/or federal laws, rules and regulations. This Article shall survive the termination or completion of this Agreement and shall continue in full force and effect and shall be binding upon the Licensor and its agents, employees, successors, assigns, subcontractors or any party or entity claiming an interest in this Agreement on behalf of, or under the rights of the Licensor following any termination or completion of this Agreement.

28.2 With the exception of any attached exhibits which are labeled as "confidential", the parties understand and agree that this Agreement does not constitute confidential information, and may be reproduced and distributed by the State without notification to Licensor. ITS will provide third party notice to Licensor of any requests received by ITS for any such confidential exhibits so as to allow Licensor the opportunity to protect the information by court order as outlined in ITS Public Records Procedures.

ARTICLE 29 EFFECT OF SIGNATURE

Each person signing this Agreement represents that he or she has read the Agreement in its entirety, understands its terms, is duly authorized to execute this Agreement on behalf of the parties and agrees to be bound by the terms contained herein. Accordingly, this Agreement shall not be construed or interpreted in favor of or against the State or the Licensor on the basis of draftsmanship or preparation hereof.

ARTICLE 30 OWNERSHIP OF DOCUMENTS AND WORK PRODUCTS

All Content collected by the Software shall be the property of Licensee. Licensor may use the Content only in the performance of this Agreement, unless otherwise agreed upon between the parties. Licensee acknowledges that the Products shall remain the exclusive property of Licensor and are excluded from this Article.

ARTICLE 31 NON-SOLICITATION OF EMPLOYEES

Licensor agrees not to employ or to solicit for employment, directly or indirectly, any of MDE's employees until at least one (1) year after the expiration/termination of this Agreement unless mutually agreed to the contrary in writing by MDE and the Licensor and provided that such an agreement between these two entities is not a violation of the laws of the State of Mississippi or the federal government.

ARTICLE 32 ENTIRE AGREEMENT

32.1 This contract constitutes the entire agreement of the parties with respect to the subject matter contained herein and supersedes and replaces any and all prior negotiations, understandings and agreements, written or oral, between the parties relating thereto, including all terms of any "shrink-wrap", "click-wrap" or "browse-wrap" license of the Software. RFP No. 3590, and Licensor's Proposal, as accepted by the State, in response thereto are hereby incorporated into and made a part of this Agreement.

32.2 The contract made by and between the parties hereto shall consist of, and precedence is hereby established by the order of the following:

A. This Agreement signed by the parties hereto;
B. Any exhibits attached to this Agreement;
C. RFP No. 3590 and written addenda, and
D. Licensor's Proposal, as accepted by the State, in response to RFP No. 3590.

32.3 The intent of the above listed documents is to include all items necessary for the proper execution and completion of the services by the Licensor. The documents are complementary, and what is required by one shall be binding as if required by all. A higher order document shall supersede a lower order document to the extent necessary to resolve any conflict or inconsistency arising under the various provisions thereof; provided, however, that in the event an issue is addressed in one of the above mentioned documents but is not addressed in another of such documents, no conflict or inconsistency shall be deemed to occur by reason thereof. The documents listed above are shown in descending order of priority, that is, the highest document begins with the first listed document ("A. This Agreement") and the lowest document is listed last ("D. Licensor's Proposal").

ARTICLE 33 STATE PROPERTY

Licensor shall be responsible for the proper custody of any Licensee-owned property furnished for Licensor's use in connection with Services performed pursuant to this Agreement. Licensor shall reimburse the Licensee for any loss or damage, normal wear and tear excepted.

ARTICLE 34 SURVIVAL

Articles 7, 14, 18, 22, 27, 28, 30, 31, and all other articles which, by their express terms so survive or which should so reasonably survive, shall survive any termination or expiration of this Agreement.

ARTICLE 35 DEBARMENT AND SUSPENSION CERTIFICATION

Licensor certifies that neither it nor its principals: (a) are presently debarred, suspended, proposed for debarment, declared ineligible or voluntarily excluded from covered transactions by

any federal department or agency; (b) have, within a three (3) year period preceding this Agreement, been convicted of or had a civil judgment rendered against them for commission of fraud or a criminal offense in connection with obtaining, attempting to obtain or performing a public (federal, state or local) transaction or contract under a public transaction; violation of federal or state anti-trust statutes or commission of embezzlement, theft, forgery, bribery, falsification or destruction of records, making false statements or receiving stolen property; (c) are presently indicted of or otherwise criminally or civilly charged by a governmental entity with the commission of fraud or a criminal offense in connection with obtaining, attempting to obtain or performing a public (federal, state or local) transaction or contract under a public transaction; violation of federal or state anti-trust statutes or commission of embezzlement, theft, forgery, bribery, falsification or destruction of records, making false statements or receiving stolen property, and (d) have, within a three (3) year period preceding this Agreement, had one or more public transaction (federal, state or local) terminated for cause or default.

ARTICLE 36 SPECIAL TERMS AND CONDITIONS

It is understood and agreed by the parties to this Agreement that there are no special terms and conditions except as specifically provided in this Agreement.

ARTICLE 37 STATUTORY AUTHORITY

By virtue of Section 25-53-21 of the Mississippi Code Annotated, as amended, the executive director of ITS is the purchasing and contracting agent for the State of Mississippi in the negotiation and execution of all contracts for the acquisition of information technology equipment, software and services. The parties understand and agree that ITS as contracting agent is not responsible or liable for the performance or non-performance of any of the Licensee's or Licensor's contractual obligations, financial or otherwise, contained within this Agreement.

ARTICLE 38 NETWORK SECURITY

Licensor and MDE understand and agree that the State of Mississippi's Enterprise Security Policy mandates that all remote access to and/or from the State network must be accomplished via a Virtual Private Network (VPN). If remote access is required at any time during the life of this Agreement, Licensor and MDE agree to implement/maintain a VPN for this connectivity. This required VPN must be IPSec-capable (ESP tunnel mode) and will terminate on a Cisco VPN-capable device (e.g., VPN concentrator, PIX firewall, etc.) on the State's premises. Licensor agrees that it must, at its expense, implement/maintain a compatible hardware/software solution to terminate the specified VPN on the Licensor's premises. The parties further understand and agree that the State protocol standard and architecture are based on industry-standard security protocols and manufacturer engaged at the time of contract execution. The State reserves the right to introduce a new protocol and architecture standard and require the Licensor to comply with same, in the event the industry introduces a more secure, robust protocol to replace IPSec/ESP and/or there is a change in the manufacturer engaged.

ARTICLE 39 SOFTWARE SUPPORT AND MAINTENANCE

39.1 As part of the warranty services and Software support and maintenance services, Licensor will maintain the Products in an operable condition according to the specifications contained in the technical manuals and as outlined in RFP No. 3590 and the Licensor's Proposal in response thereto. Licensor shall provide Licensee with Enhancements to the Software as they are made generally available from time to time. Notwithstanding any other provisions of this Agreement, Licensor shall provide support only with respect to the then-current generally available version of the Software.

39.2 Licensor shall also provide unlimited email and toll-free telephone technical support in the operation of the Software Products twenty-four (24) hours a day, seven (7) days a week. Licensor shall respond by telephone within one (1) hour to requests for support services. Licensee shall be given priority placement in the support queue for all system locking situations or problems claimed by Licensee to be a mission critical process. Upon receipt of Licensee's call, Licensor will (a) create an error report, (b) assign a severity level and (c) attempt to resolve the Software problem in accordance with the procedures and processes for problem resolution detailed below. It is understood by the parties that the Licensee and Licensor must mutually agree on whether an error is classified as a Severity Level 1, 2, 3, or 4 error.

39.3 Severity Level 1 shall be defined as urgent situations, when the State's production system is down and the State is unable to use the proposed system. The Licensor's technical support staff shall accept the State's call for assistance at the time the State places the initial call; however, if such staff is not immediately available, the Licensor shall return the State's call within one (1) business hour. The Licensor shall resolve Severity Level 1 problems within one (1) business day, or within a mutually agreed upon time frame.

39.4 Severity Level 2 shall be defined as a critical software system component that has significant outages and/or failure precluding its successful operation, and possibly endangering the State's environment. The proposed system may operate but is severely restricted (e.g., a frequently used functionality gives an incorrect response). The Licensor's technical support staff shall accept the State's call for assistance at the time the State places the initial call; however, if such staff is not immediately available, the Licensor shall return the State's call within one (1) business hour. The Licensor shall resolve Severity Level 2 problems within two (2) business days, or within a mutually agreed upon time frame.

39.5 Severity Level 3 shall be defined as a minor problem that exists with the system but the majority of the functions are still usable and some circumvention may be required to provide service (e.g., an infrequently used functionality gives an incorrect response). The Licensor's technical support staff shall accept the State's call for assistance at the time the State places the initial call; however, if such staff is not immediately available, the Licensor shall return the

State's call within three (3) business hours. The Licensor shall resolve Severity Level 3 problems within ten (10) business days, or within a mutually agreed upon time frame.

39.6 Severity Level 4 shall be defined as a very minor problem or question that does not affect the system's function (e.g., the text of a message is worded poorly or misspelled). The Licensor's technical support staff shall accept the State's call for assistance at the time the State places the initial call; however, if such staff is not immediately available, the Licensor shall return the State's call within four (4) business hours. The Licensor shall resolve Severity Level 4 problems within fifteen (15) business days, or within a mutually agreed upon time frame.

ARTICLE 40 FORCE MAJEURE

Each party shall be excused from performance for any period and to the extent that it is prevented from performing any obligation or service, in whole or in part, as a result of causes beyond the reasonable control and without the fault or negligence of such party and/or its subcontractors. Such acts shall include without limitation acts of God, strikes, lockouts, riots, acts of war or terrorism, epidemics, governmental regulations superimposed after the fact, fire, earthquakes, floods, or other natural disasters (the "Force Majeure Events"). When such a cause arises, the Licensor shall notify the Licensee immediately in writing of the cause of its inability to perform; how it affects its performance, and the anticipated duration of the inability to perform. Delays in delivery or in meeting completion dates due to Force Majeure Events shall automatically extend such dates for a period equal to the duration of the delay caused by such events, unless the State determines it to be in its best interest to terminate this Agreement.

ARTICLE 41 CHANGE ORDER RATE AND PROCEDURE

41.1 It is understood that the State may, at any time by a written order, make changes in the scope of the project. No changes in scope are to be conducted or performed by the Licensor except by the express written approval of the State. The Licensor shall be obligated to perform all changes requested by the Licensee, which have no price or schedule effect.

41.2 The Licensor shall have no obligation to proceed with any change that has a price or schedule effect until the parties have mutually agreed in writing thereto. Neither the State nor the Licensor shall be obligated to execute such a change order; and if no such change order is executed, the Licensor shall not be obliged or authorized to perform services beyond the scope of this Agreement and the contract documents. All executed change orders shall be incorporated into previously defined deliverables.

41.3 With respect to any change orders issued in accordance with this Article, the Licensor shall be compensated for work performed under a change order according to the hourly change order rate of $INSERT HOURLY RATE per hour. If there is a service that is not defined in the change order rate, the Licensor and the State will negotiate the rate. The Licensor agrees that this change order rate shall be a "fully loaded" rate, that is, it includes the cost of all materials, travel

expenses, per diem, and all other expenses and incidentals incurred by the Licensor in the performance of the change order. The Licensor shall invoice the Licensee upon acceptance by the Licensee of all work documented in the change order, and the Licensee shall pay invoice amounts on the terms set forth in this Agreement.

41.4 Upon agreement of the parties to enter into a change order, the parties will execute such a change order setting forth in reasonable detail the work to be performed thereunder, the revisions necessary to the specifications or performance schedules of any affected project work plan, and the estimated number of professional services hours that will be necessary to implement the work contemplated therein. The price of the work to be performed under any change order will be determined based upon the change order rate; however, the change order will be issued for a total fixed dollar amount and may not be exceeded regardless of the number of hours actually expended by the Licensor to complete the work required by that change order. The project work plan will be revised as necessary.

41.5 The Licensor will include in the progress reports delivered under this Agreement, the status of work performed under all then current change orders.

41.6 In the event the Licensor and the State enter into a change order which increases or decreases the time required for the performance of any part of the work under this Agreement, the Licensor shall submit to the Licensee a revised version of the project work plan, clearly indicating all changes, at least five (5) working days prior to implementing any such changes.

41.7 The Licensee shall promptly review all revised project work plans submitted under this Agreement, and shall notify the Licensor of its approval or disapproval, in whole or in part, of the proposed revisions, stating with particularity all grounds for any disapproval, within ten (10) working days of receiving the revisions from the Licensor. If the Licensee fails to respond in such time period or any extension thereof, the Licensee shall be deemed to have approved the revised project work plan.

ARTICLE 42 RETAINAGE

To secure the Licensor's performance under this Agreement, the Licensor agrees that MDE shall hold back as retainage fifteen percent (15%) of each amount payable, including amounts payable under change orders, under this Agreement. The retainage amount will continue to be held until final acceptance of the system by MDE.

ARTICLE 43 LIQUIDATED DAMAGES

It is agreed by the parties hereto that time is of the essence and that in the event of a delay in the delivery and installation deadlines or delay in the satisfactory completion and acceptance of the services provided for herein, damage shall be sustained by MDE. In the event of a delay as described herein, Licensor shall pay MDE, within five (5) calendar days from the date of receipt

of notice, fixed and liquidated damages of $150.00 per day for each calendar day of delay caused by Licensor. MDE may offset amounts due it as liquidated damages against any monies due Licensor under this Agreement. MDE will notify Licensor in writing of any claim for liquidated damages pursuant hereto on or before the date MDE deducts such sums from money payable to Licensor. Any liquidated damages assessed are in addition to and not in limitation of any other rights or remedies of MDE.

ARTICLE 44 PERFORMANCE BOND

As a condition precedent to the formation of this Agreement, the Licensor must provide a performance bond as herein described. To secure the Licensor's performance, the Licensor shall procure, submit to the State with this executed Agreement, and maintain in effect at all times during the course of this Agreement a performance bond in the total amount of this Agreement. The bond shall be accompanied by a duly authenticated or certified document evidencing that the person executing the bond is a licensed Mississippi agent for the bonding company. This certified document shall identify the name and address of the person or entity holding the performance bond and shall identify a contact person to be notified in the event the State is required to take action against the bond. The term of the performance bond shall be concurrent with the term of this Agreement, with the exception of post-warranty maintenance and support, and shall not be released to Licensor until final acceptance of all products and deliverables required herein or until the warranty period, if any, has expired, whichever occurs last. If applicable, and at the State's sole discretion, the State may, at any time during the warranty period, review Licensor's performance and performance of the products/services delivered and determine that the Licensor's performance bond may be reduced or released prior to expiration of the full warranty period. The performance bond shall be procured at Licensor's expense and be payable to the MDE. The cost of the bond may be invoiced to the MDE after project initiation only if itemized in the Licensor's cost proposal and in the attached Exhibit A. Prior to approval of the performance bond, the State reserves the right to review the bond and require Licensor to substitute an acceptable bond in such form as the State may reasonably require. The premiums on such bond shall be paid by Licensor. The bond must specifically refer to this Agreement and shall bind the surety to all of the terms and conditions of this Agreement. If the Agreement is terminated due to Licensor's failure to comply with the terms thereof, MDE may claim against the performance bond.

ARTICLE 45 PERSONNEL ASSIGNMENT GUARANTEE

Licensor guarantees that the personnel assigned to this project will remain a part of the project throughout the duration of the Agreement, as long as the personnel are employed by the Licensor and are not replaced by Licensor pursuant to the third paragraph of the Article herein titled "Employment Status." Licensor further agrees that the assigned personnel will function in the capacity for which their services were acquired throughout the life of the Agreement, and any failure by Licensor to so provide these persons shall entitle the State to terminate this Agreement for cause. Licensor agrees to pay the MDE fifty percent (50%) of the total contract amount if any

of the assigned personnel is removed from the project prior to the ending date of the contract for reasons other than departure from Licensor's employment or replacement by Licensor pursuant to the third paragraph of the Article herein titled "Employment Status." Subject to the State's written approval, the Licensor may substitute qualified persons in the event of the separation of the incumbents therein from employment with Licensor or for other compelling reasons that are acceptable to the State and may assign additional staff to provide technical support to MDE. The replacement personnel shall have equal or greater ability, experience, and qualifications than the departing personnel and shall be subject to the prior written approval of the MDE. The Licensor shall not permanently divert any staff member from meeting work schedules developed and approved under this Agreement, unless approved in writing by the MDE. In the event of Licensor personnel loss or redirection, the services performed by the Licensor shall be uninterrupted and the Licensor shall report in required status reports its efforts and progress in finding replacements and the effect of the absence of those personnel.

ARTICLE 46 ESCROW OF SOURCE CODE

46.1 With the execution of this Agreement, the Licensor shall place and maintain a current copy of the data dictionary, documentation, object code, and source code in escrow and shall furnish MDE with a copy of the escrow agreement and the name and address of the agent. The escrow agreement shall authorize the escrow agent to release, at no cost to MDE, the data dictionary, documentation, object code, and source code to MDE if and when the MDE is deemed to have a right under this Article. The Licensor shall pay all costs of providing and maintaining the escrow agreement, including the fees of the escrow agent. The copy of the source code placed in escrow shall be reproduced and maintained on magnetic tape or disk using a commonly accepted data recording protocol. Program documentation sufficient to allow a competent programmer to use and maintain the source code programs must accompany the source code. When a change is made to the object code or source code by or on behalf of the Licensor during the term of the escrow agreement, the revised code, including the change, shall be delivered to the escrow agent not later than thirty (30) calendar days after the change is effected by or on behalf of the Licensor.

46.2 Provided that the MDE is not then in substantial default under this Agreement, the Licensor shall provide to MDE, at no cost and within ten (10) calendar days after receipt of MDE's written request for it, one (1) complete copy of the data dictionary, documentation, object code, and source code used in the preparation of the software and custom modifications to the source code and object code as a result of this Agreement, brought up to date as of the date of delivery of such source code to MDE, upon the occurrence of any of the following events: (a) any or all material part of the source code or object code is generally made available, with or without additional cost, to other users of comparable software; or (b) the Licensor's or the software manufacturer's cessation, for any reason, to do business; or (c) the Licensor or the software manufacturer discontinues maintenance of the software; or (d) bankruptcy, receivership, insolvency, reorganization, dissolution, liquidation, or other similar proceedings are instituted by

or against the Licensor or the software manufacturer.

For the faithful performance of the terms of this Agreement, the parties hereto have caused this Agreement to be executed by their undersigned authorized representatives.

State of Mississippi, Department of Information Technology Services, on Behalf of Mississippi Department of Education

By: _____
Authorized Signature

Printed Name: David L. Litchliter

Title: Executive Director

Date: _____

INSERT VENDOR NAME

By: _____
Authorized Signature

Printed Name: _____

Title: _____

Date: _____

Mississippi Department of Education

By: _____
Derrick Lindsay
Chief Information Officer

Date: _____

EXHIBIT A
PAYMENT SCHEDULE

ATTACHMENT B
FORMS

Teacher Support Team Local Action Plan

Student Data Sheet

MSIS No.: _____ Social Security No.:_____

Student: _____ Birthdate: ___/___/___ School: _____
Last First MI

Teacher: _____

Parent: _____ Phone: _____ Grade: _____
Father

_____ Address: _____
Mother

Mississippi Department of Education: Tier 1 Documentation

Student Name:_____ Date:_____

Tier 1 Documentation							
	Observations Conducted		**Appropriate Instruction**	**Classroom Management**	**Differentiated Instruction**		**Universal Screening**	**Student's Percentile Score**
Mathematics	Y	N	Y N	Y N	Y	N	Measure: Date(s):	
Reading	Y	N	Y N	N	Y	N	Measure: Date(s):	
Language Arts	Y	N	Y N	N	Y	N	Measure: Date(s):	
Science	Y	N	Y N	N	Y	N	Measure: Date(s):	
Social Studies	Y	N	Y	N	Y	N	Measure: Date(s):	
Other: _____	Y	N	Y	N	Y	N	Measure: Date(s):	

CUMULATIVE RECORD REVIEW -Each area must be addressed-OR-indicate as not applicable (NA)

ATTENDANCE	TESTING INFORMATION	SCREENING (must be within last 6 months)
1. Last Year Days Present: _____ Days Absent: _____ 2. Total days missed since student began school: _____ 3. List all schools attended: _____ _____ _____	1. MCT 2. SATP	1. Hearing Date: _____ Results: _____ Recheck Needed: _____ 2. Vision Date: _____ Results: _____ Recheck Needed: _____ **SPECIAL NEEDS:**
DISCIPLINE RECORD Number of discipline reports_____ Number of suspensions _____ In-school _____ Out-of-school_____	**MOST RECENT ACADEMIC GRADES** **Letter GR** 1. Language Arts _____ 2. English _____ 3. Math _____ 4. Spelling _____ 5. Science _____ 6. Social Studies _____ 7. Health/PE _____ 8. Other _____	Other: 1. Retentions Yr(s) _____ Gr(s) _____ 2. Previous enrollment in Special Education Programs/Section 504: _____

Student's parent notified of plan? (circle) Y/N **Date**:_____

ATTACHMENT C
MODEL FORMS

Mississippi Department of Education
TIER I ACTION PLAN
Procedures

Classroom Observations Schedule

- *Observation 1a-* complete by end of 1st 6 weeks in school
  - Action Plan- completed and implemented within 3 weeks of observation
  - Observation 1b.- completed within 1 week of action plan's implementation
- *Observation 2-* completed by end of 2nd 6 weeks in school (weeks 7-12)
- *Observation 3-* completed by end of 3rd 6 weeks in school (weeks 13-18)
- *Observation 4-* completed by end of 4th 6 weeks in school (weeks 19-24)
- *Observation 5-* completed by end of 5th 6 weeks in school (weeks 25-30)
- *Observation 6-* completed by end of 6th 6 weeks in school (weeks 31-36)

Procedures

Each teacher will be observed a minimum of 6 times per year using the Tier I Classroom Observation Form.

If any classroom falls below 3 points on any specific area or below the District set topical minimum (I, II, III, or IV), that classroom must complete a Tier I Action Plan. School administration must oversee Tier I Classroom Observations as well as Tier I Action Plan.

Mississippi Department of Education: TIER I ACTION PLAN

Date:_____ Teacher:_____
School:_____ Administrator:_____
Topical set minimum:

I. High Quality Classroom Instruction: 80%
II. Differentiated Instruction: 80%
III. Support for Teachers: 80%
IV. Empirically Based Curriculum

	Areas falling below 3 points	**New procedures & modifications**	**Date to be implemented**	**Date to be observed**	**Was the modification effective? Y/N**	**Date of Next Evaluation**
1.						
2.						
3.						
4.						
5.						
6.						
7.						
8.						
9.						
10.						

Date:_____ Teacher:_____
Date:_____ Administrator:_____

Tier 2 Documentation Form

Student Name:_____
Classroom:_____ **Date:**_____
Administrator:_____ **Interventionist Name and Qualification:**_____

Target Area(s) (Academic and/or behavior):_____
Skills(s):_____
Goals(s):_____
_____
Intervention:_____
_____

Components of Intervention:_____
_____
_____
_____
_____

Proposed Schedule (i.e. number of sessions per/week, length of each session, where will intervention take place):_____
_____

Integrity of Intervention will be observed by _____ **during** _____ **number of sessions.**

Student's parents notified of Tier II intervention (circle): Y/N

TST Committee will review Tier II intervention data on _____**.**

TST Committee:

_____	_____
Teacher Signature	**Date**
_____	_____
Administrator Signature	**Date**
_____	_____
Other Signature	**Date**

	Intervention Used	Days Implemented	Interventionist	Integrity observed (name/date)	Intervention Implemented with Integrity		Progress Monitor (score/date)	Stu Resp
Baseline					80% or better			
Week 1					Y	N		Y
Week 2					Y	N		Y
Week 3					Y	N		Y
Week 4					Y	N		Y
Week 5					Y	N		Y
Week 6					Y	N		Y
Week 7					Y	N		Y
Week 8					Y	N		Y
Week 9					Y	N		Y
Week 10					Y	N		Y

TST-5 Tier

TIER 2 DATA CHART

__ Reading
__ Math
__ Spelling
__Writing
__ Other

Student Name_____

Check here if attaching graph _____

What is the supplemental instruction: _____**?**

WEEK#	DATE	DATA
1/ 1		
2/2		
3/3		
4/4		
5/5		
6/6		
7/7		
8/8		
9/9		
10/10		

Baseline **Supplemental Instruction**

BI B2 B3 1 2 3 4 5 6 7 8 9 10

INSTRUCTIONAL WEEKS

Dependent Variable: _____ Put numbers in the blanks on the left of the graph to indicate if it is percentage 10, 20, 30 or WCPM: 10, 20, 30, 40 etc.

REQUEST TO THE SCHOOL TEACHER SUPPORT TEAM

TO: Teacher Support Team Chair

I request that the above named student be reviewed by the TST to assist in providing interventions in an effort to improve his/her overall academic performance.

I have observed problems that interfere with his/her educational progress in the following area(s):

_____ Academic performance, low or failing grades

_____ Behavior and/or discipline

_____ Speech, articulation

_____ Language

_____ Medical

_____ Other, specify _____

OR

Referral of student is made based upon Mississippi State Board Policy IEI. These referrals must be made within the first twenty school (20) days of a school year if the child failed the preceding year. Please indicate below:

_____ Grades 1-3: Student has failed one grade.

_____ Grades 4-12: Student has failed two grades.

_____ Student failed either of the preceding two grades and has been suspended or expelled for more than twenty (20) days in the current school year

Teacher Support Team/Student Data Sheet

Student: _____ Birthdate:____/____/____
School: _____ Teacher: _____ Grade: _____

B. TEACHER OBSERVATIONS-For each area, rate the student in comparison to classmates using scale from 0 to 5. (If NA-use 0; in lowest 10%-use 1; below average-use 2; average-use 3; above average-use 4; in highest 10%-use 5)

Physical & Communication	**Participation**
_____General appears healthy _____Normal energy level _____Gross motor coordination _____Fine motor coordination _____Speech (articulation) _____Spoken language _____Written language	_____Attends school regularly _____Arrives on time for class _____Completes assignments _____Concentrates and able to attend _____Participates in class _____Functions independently _____Follows directions
Social	**Related Concerns**
_____Age appropriate self-help skills _____Displays feelings appropriate to situation _____Sensitive to social culture _____Relates well to adults _____Relates well to peers	_____Aberrant behavior for age or school setting _____Substance abuse _____Inappropriate peer contacts _____Personal hygiene _____Dress appropriate to climate

Are the above-checked items compelling enough to indicate this student's educational performance is primarily due to environmental, cultural or economic disadvantage? Explain

ENGLISH LANGUAGE LEARNER

How long has the student spoken English?
_____

Is there a language other than English spoken by the student?
_____

Is there a language other than English spoken in this student's home?
_____

(If the above information indicated the student has not always had English as their primary language, please address the following questions.)

What ELL services or assistance have been provided?
_____
_____
_____

Teacher Support Team/Student Data Sheet – Page 3

Student: _____ Birthdate:____/____/____
School: _____ Teacher: _____ Grade: _____

ENGLISH LANGUAGE LEARNER (continued)
Do the results of evaluation by the ELL teacher indicate lack of expected progress in the English language for the student's chronological age level? If not, explain.

_____
_____
_____

What is the student's current proficiency level in English?_____
Keep in mind that conversational language skills are not the same as the ability to think and reason in a language. While the student may be able to speak with peers or adults and to understand basic instructions or rules, the effects of ELL may still affect the student's ability to think and reason academically.

MOTOR IMPAIRMENT
Does the student experience any motor limitations, which impact educational performance? If yes, explain further with summary of parent and medical reports._____
_____
_____

MOTIVATION
Students should not be classified as having a learning disability if failure to progress academically is due to an absence of motivation. To help clarify if motivational issues are the primary cause of the student's academic deficits, please address the following questions:

Does the student want to succeed in school? Give examples to support your answer.

_____
_____
_____

Does the student seek assistance from teachers, peers, others?

_____
_____
_____

Does the parent report efforts made at home to complete homework or study assignments?

_____
_____
_____

Is the student making an effort to learn? Explain.

_____
_____
_____
_____

Are student's achievement scores consistent with the student's grades?

_____
_____

SITUATIONAL TRAUMA

Situational stressors can cause daydreaming, poor memory, lack of attention, etc. which affect educational performance. Temporary, sudden, or recent change in the student's life must be ruled out as a primary cause of academic deficits.

Has the student experienced a recent trauma? (i.e. parents divorced, illness of student or family member, death of family member or serious accident or injury, financial crisis, crime victim, etc.)_____
_____
_____
_____
_____

Is there any other situation that could create stress or emotional upsets?

_____
_____
_____
_____

Has there been a significant change in the student's classroom performance within a short period of time (6-12 months)?

_____
_____
_____
_____

YOUNG CHILDREN

There is a wide variability in the rate and pattern of maturation, development and learning in early childhood. Developmental differences often resolve with maturation and should not be mistakenly identified as a learning disability. In addition, standardized assessment instruments are not as reliable at younger ages (before 8), and the stability of measurement can vary greatly. For students referred for a learning disability before age 8, please address the following:

What preschool education has the student received?_____

Has the student experienced adequate stimulation?

_____

Is child eligible for free/reduced lunch?

_____

How much formal education has the student received?

_____

_____

What progress has been made based on measurable data?

_____

_____

_____

_____ _____

Signature of Classroom Teacher Date

_____ _____

School-based Instructional Personnel Date

TST – 8 Tier

Social/Emotional Issues Worksheet

Student _____ Grade ____ Date _____

(PLEASE COMPLETE THE FORM TO THE BEST OF YOUR ABILITY. PLEASE GIVE FACTUAL RATHER THAN OPINION-BASED RESPONSES.)

STUDENT IS DISRUPTIVE IN CLASS:

fidgets
is overly active
will not remain in seat
talks out of turn
disturbs others when they are working
constantly seeks attention
overly aggressive with others (i.e., physical fights)
belligerent toward teachers and others in authority
defiant or stubborn
impulsive
- can't wait his/her turn
- acts without thinking of the consequences

STUDENT IS WITHDRAWN

shy, timid
has difficulty making friends
- sits alone in cafeteria
- does not join in classroom group activities

overly conforms to rules
appears to daydream or be out of touch with the class
has difficulty expressing feelings

STUDENT IS ANXIOUS:

appears depressed
rarely smiles
appears to be tense
appears frightened or worried
cries easily
does not trust others
reports fears or phobias (such as fear of coming to school)

OTHER SOCIAL/EMOTIONAL BEHAVIORS:

lacks self-confidence
- says "can't do" even before attempting

reacts poorly to disappointment

is overly sensitive to disappointment
depends on others
clingy with adults
pretends to be ill
has poor grooming or personal hygiene

STUDENT HAS:

been on runaway status
been caught for stealing at school
left class without permission
cursed school personnel
threatened to harm school personnel or wished school personnel harm
been suspended for fighting
attempted suicide
had tobacco violations at school
had drug/alcohol violations at school

CLASSROOM INTEREST:

High Mild Bored Other, Please Specify

CLASSROOM PARTICIPATION:

almost always
frequently
occasionally
seldom

CLASSROOM PREPAREDNESS:

always brings necessary supplies
usually brings supplies
seldom comes to class with supplies
never comes to class with supplies

MOTIVATION:

tends to give up easily
usually completes about half of the assignment
does complete homework
has difficulty getting started on assignments

TO THE BEST OF YOUR KNOWLEDGE:

This student is involved with the court system.
This student is in counseling.
This student is on medication.

Teacher Support Team (TST) Meeting Summary Form

MSIS No.: _____ Social Security No.: _____

Student: _____ Birthdate: ___/___/___ Age:_____
Last First MI

Ethnicity: _____ School: _____Grade: _____

Meeting Date: _____

Summary of Discussion:

_____
_____
_____
_____
_____

( ) Summary continued on back.

Recommendations:

( ) Parental Contact ( ) Academic Instructional Intervention in the area(s): ___Reading___Math ___Language ( ) Behavior Management Program/Plan ( ) Behavior Observation ( ) Student Conference ( ) Other:	( ) Additional Screening (5 yr. old, in-school) ( ) Hearing/Vision Screening ( ) Medical Follow-up ( ) Referral to School Counselor ( ) Referral to Community Agency ( ) Remain in Regular Education ( ) Continue Instructional Intervention(s) in Regular Education Classroom ( ) Complete Teacher Narrative Packet ( ) Refer for Child Study (LSC Chairperson will notify you of upcoming meeting) ( ) Other:

TST Members Present:

Name	Title

CURRICULUM AND INSTRUCTION
Teacher Support Team
Recommendation

MSIS No.: _____ Social Security No.: _____

Student: _____ Birthdate: ___/___/___ School: _____
Last First MI

The Teacher Support Team (TST) has met to review and utilize all of the possible resources within the school and/or district to meet the needs of the above referenced student.

The TST has recommended the following options:

_____

_____

_____

_____

For the following reasons:

_____

_____

_____

_____

To be completed by: _____

Principal's signature: _____ Date: _____

INSTRUCTIONAL INTERVENTION DOCUMENTATION SHEET FOR TIER THREE

INSTRUCTIONS: Refer to the MDE Reading, Writing and Math Instructional Intervention Supplements for appropriate Informal Assessments and Strategies. The Informal Assessments provide GUIDING QUESTIONS and TASK SAMPLES for the BENCHMARK(S). The Strategies will assist you in designing and implementing curriculum-based Instructional Interventions.

STUDENT:		**TEACHER:**	**SCHOOL YEAR:**				
MSIS Number:		**Social Security Number:**					
GENERAL INFORMATION	**SCHOOL:**	**Tier Three Referral Date:**					
	GRADE:	**Intervention Start Date:**					
	SUBJECT:	**First Intervention Review Date: (6 weeks)**	Sufficient Progress?		Yes		No
			If no, an additional intervention form should be completed.				
		Second Intervention Review Date: (12 weeks)	Sufficient Progress?		Yes		No
			If no, an additional intervention form should be completed.				
		Final Determination Date (within 18 weeks)					

An instructional intervention is a series of planned activities that are different from those activities normally occurring in the child's regular education program.

What Is the referring problem? (To be stated in specific and measurable terms.)

What data supports the existence of the problem? (Baseline data)

What is the goal to resolve this problem? (To be stated in specific and measurable terms.)
Describe the intervention to be attempted. (Please complete all information as noted.)

List specific objective(s) of this intervention.	**Describe the activities for each objective(s) involved.**	**List the specific evaluation criteria to be utilized.**

CONDUCTED BY:	**NAME:**			
	POSITION:			
TIMESPAN:	**BEGIN DATE:**		**END DATE:(Cannot exceed 18 school weeks):**	
Frequency		**Duration**		
Progress Monitoring Checks to Be Completed:				
Frequency of Progress Monitoring:				
Evaluation of success of intervention (Please check the appropriate response and complete all information.)				
Compare baseline data to goal data. Attach documentation.				
Planned intervention was successful in meeting child's needs. This intervention will be continued in the current setting.	Planned intervention was not successful in meeting the child's needs. Another instructional intervention will be conducted to attempt to meet child's needs.		Planned intervention was not successful in meeting the child's needs. Referral for Child Study is being considered due to:	

Signatures

TIER III DATA CH

__ Reading
__ Math
__ Spelling
__Writing
__ Other

Student Name_____
School _____ **Grade**_____

What is the intervention? _____

DAY#	DATE	DATA	DAY #	DATE	DATA	DAY #	DATE	DATA

Baseline **Intervention**

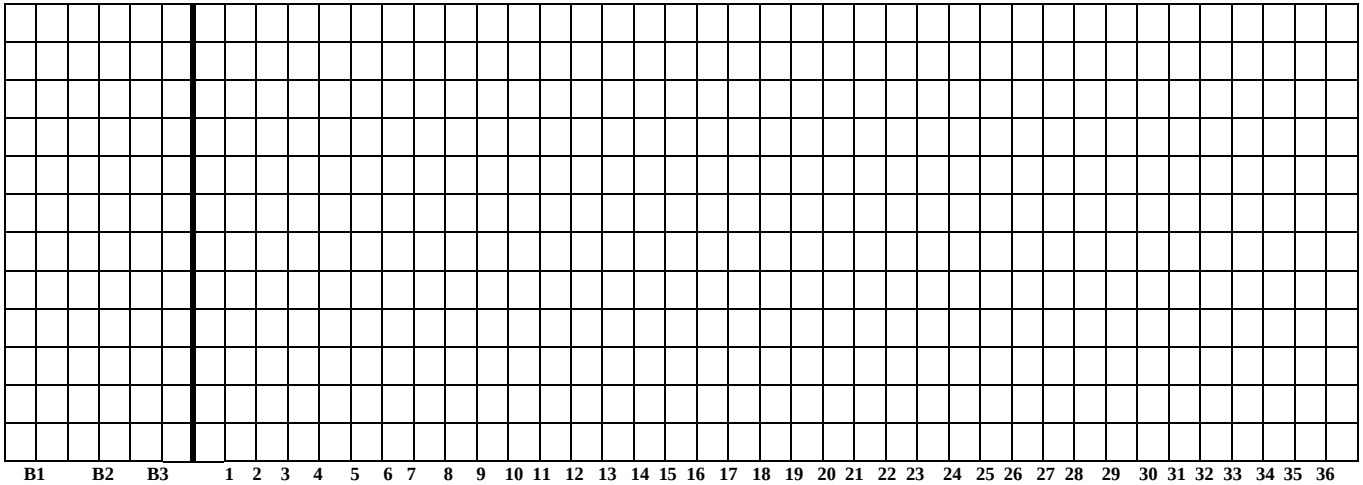

INSTRUCTIONAL DAYS

Dependent Variable: _____ Put numbers in the blanks on the left of the graph to indicate if it is percentage 10, 20, 30 or WCPM: 10, 20, 30, 40 etc.

ATTACHMENT D
ADDITIONAL FORMS

Statement of Confidentiality

This form is to be completed prior to participating in the Teacher Support Team (TST) process.

I agree that all information (i.e., teacher and student information, school performance data, specific demographic data, etc.) discussed pertaining to the TST process will be held in strict confidence. I will neither contact anyone outside the official function of this TST process for any reason nor will I make any notes or copies of any documents utilized during the process.

_____ _____
Signature Date

_____ _____
Witness Date

Teacher Support Team Parent Invitation

Student: _____ School: _____ Date: _____
Dear Parent/ Guardian:
The Teacher Support Team (TST) would like to invite you to a meeting regarding your child's progress in school. The TST's purpose is to review and consider all available information and to recommend additional educational strategies and interventions to further assist your child. The TST may consist of up to six (6) staff members, depending on your child's individual need(s). We welcome and desire your participation in the decision

making process through your attendance. If you are unable to attend the meeting, a copy of the minutes will be provided for your review.
A Meeting is schedule for:
Date/ Day: _____
Time: _____
Location: _____
Should you have any concerns, please contact me at:
Phone number: _____
E-mail Address: _____
Sincerely,

TST Chair

Healthy Schools
Fitness Tests by Component

Aerobic Capacity	**Muscular Strength**	**Muscular Endurance**	**Flexibility**	**Body Composition**	**Agility**
Pacer Test One Mile Run Walk Test 1.5 Mile Run	Push-Up Abdominal Curl Up Modified Pull-up Pull-Up Flexed-Arm Hang Partial Curl-Up Trunk Lift	Flexed Arm Hang Abdominal Curl Up Trunk Lift	Sit and Reach Shoulder Stretch	BMI % Body Fat Height Weight	Shuttle Run

ATTACHMENT E
BUSINESS RULES

MS Department of Education

Special Education Business Rule Updates

Mississippi Department of
Information Technology Services

Version 2.0

March 20, 2009

1. Rules for the Pre Cutoff Report, Post Cutoff Report and fill the FED_SPED_STUDENT_DATA table

```
The student must be:
1)
- Enrolled in the school (student that have dropped out or withdrawn are not
included, student withdrawn with T1 are included) OR
- Has a PA_STUDENT_INDICATOR record for the district, school, and year where
the
      - create user has DSD in the value (tells us that the indicator record
was created by a DSD XML submission from the school) OR
      - school is a 500 school OR
      - District number is 2561 OR
      - District number is 2560 OR
      - create user is null and modify user has DSD in the value (tells us
that the indicator rolled from the previous year and the school submitted a
DSD XML submission to modify it) OR
      - Student is not enrolled in the school and the student has an indicator
record that was submitted after the withdrawal date for the student (this is
to catch the student who had withdrawn from the school and then came back and
the school is trying claim him before the cutoff)

AND
2)
- The student has a primary disability for the year AND
- Has an indicator record for the district, school, and year where the
Special Ed indicator is Yes (this must be the most recent indicator record)
AND
- The student has a Teacher SSN associated with it

AND
3)
- The student must be owned by the district and school before the cutoff
Date

* University Based students are also entered in the FED_SPED_STUDENT_DATA
table using an import process as well as an update screen. These students are
identified in the table by a USER_ENTERED value of "Y" and will have a MSIS
Student ID in the following format: UBYYxxxxx (where YY represents the last 2
digits of the schoolyear and xxxxx is a unique sequentially generated number)
They will not exist in the PA_STUDENTS table.
```

1.1. *P_FILL_FED_SPED_STUDENT_DATA*

This procedure is used to pull SPED data from the December tables according to the rules above and populate the FED_SPED_STUDENT_DATA table. It pulls information about the student from the following tables: DECSP_PA_STUDENTS, DECSP_PA_STUDENT_INDICATORS, DECSP_SPED_STUDENT_DATA, DECSP_SPED_STUDENT_REL_SERVS,

DECSP_SPED_STUDENT_DISABLTS, DECSP_SPED_STUDENT_PLACEMENT, and DECSP_SCHOOL_STUDENT_OWNERSHIP. The field USER_EDU_ENV is populated with the Educational Environment IEP placement. The field CALC_PLACEMENT is populated with the Federal Placement calculated by the LRE process. The field EDU_PLACEMENT is populated with the Federal Calculated Placement and if no Federal Calculated Placement exists, the field will be populated with the Educational Environment IEP Placement.

1.2. *P_FILL_FED_SPED_STU_LIVE*

This procedure follows the same rules and purpose of the P_FILL_FED_SPED_STUDENT_DATA procedure, but instead pulls data from the Live tables vs. the December tables.

1.3. *ARCH_P_FILL_FED_SPED_STUDENT*

This procedure follows the same rules and purpose of the P_FILL_FED_SPED_STUDENT_DATA procedure, but instead pulls data from the ARCH_SPED_STUDENT_PLACEMENT table vs. the DECSP_SPED_STUDENT_PLACEMENT table. All other tables are December tables. In the archive procedure ONLY, if the Federal Calculated Placement is 99, then the Educational Environment IEP value (if one exists) is placed in the EDU_PLACEMENT field.

2. LRE procedure

Both the ARCHIVE and LIVE procedures update data in the corresponding placement tables. If an educational environment placement value exists then the procedure does not calculate or update the placement for that student if the value was entered by a user with a SPED Management user role or if any other user entered a value other than SA, SB, or SC. In this case, the placement_code field will be populated with the educational environment placement. After the month five district approval record has been marked complete, the LRE LIVE procedure will take the second semester courses into account when calculating placement. Thus, there are two LRE LIVE procedures: one that runs before month five and one that runs after.

1. ARCHIVE procedure inserts records into the ARCH_SPED_STUDENT_PLACEMENT table into the placement_code field with a level of “F” for Federal. (“S”tate level is no longer used.)

2. LIVE procedure inserts records into the SPED_STUDENT_PLACEMENT table into the placement_code field with a level of “F” for Federal. (“S”tate level is no longer used.)

2.1. *P_SPED_LRE_LIVE_CALL1*

This procedure is used to calculate a SPED placement for a student in a Public school using the latest monthly record sent to MDE for districts 0000 – 1000. This procedure should be run each month after district approvals is run to ensure that the update to date placement is available. The first thing this procedure does is call another procedure named P_SPED_STU_CNT_LIVE which updates the EMPLOYEE_PERIODS table with the number of SPED students in the course taught by that employee. Next, this procedure captures the latest month which has been COMPLETED by the district being processed. Last, this procedure calls either

P_SPED_LRE_MAIN_LIVE (before month five) or P_SPED_LRE_MAIN_LIVE_S2 (after month five) which calculates the placement for the child and inserts that calculation into the SPED_STUDENT_PLACEMENT table.

2.2. *P_SPED_LRE_LIVE_CALL2*

This procedure is used to calculate a SPED placement for a student in a Public school using the latest monthly record sent to MDE for districts 1001 - 2000. This procedure is to be run after each monthly processing has been done starting with month 1 and up until month 3. The first thing this procedure does is call another procedure named P_SPED_STU_CNT_LIVE which updates the EMPLOYEE_PERIODS table with the number of SPED students in the course taught by that employee. Next, this procedure captures the latest month which has been COMPLETED by the district being processed. Last, this procedure calls either P_SPED_LRE_MAIN_LIVE (before month five) or P_SPED_LRE_MAIN_LIVE_S2 (after month five) which calculates the placement for the child and inserts that calculation into the SPED_STUDENT_PLACEMENT table.

2.3. P_SPED_LRE_LIVE_CALL3

This procedure is used to calculate a SPED placement for a student in a Public school using the latest monthly record sent to MDE for districts 2001 – 3000 but not in (2520, 2400, and 2420). This procedure is to be run after each monthly processing has been done starting with month 1 and up until month 3. The first thing this procedure does is call another procedure named P_SPED_STU_CNT_LIVE which updates the EMPLOYEE_PERIODS table with the number of SPED students in the course taught by that employee. Next, this procedure captures the latest month which has been COMPLETED by the district being processed. Last, this procedure calls either P_SPED_LRE_MAIN_LIVE (before month five) or P_SPED_LRE_MAIN_LIVE_S2 (after month five) which calculates the placement for the child and inserts that calculation into the SPED_STUDENT_PLACEMENT table.

2.4. P_SPED_LRE_LIVE_CALL4

This procedure is used to calculate a SPED placement for a student in a Public school using the latest monthly record sent to MDE for districts 3001 – 4000. This procedure is to be run after each monthly processing has been done starting with month 1 and up until month 3. The first thing this procedure does is call another procedure named P_SPED_STU_CNT_LIVE which updates the EMPLOYEE_PERIODS table with the number of SPED students in the course taught by that employee. Next, this procedure captures the latest month which has been COMPLETED by the district being processed. Last, this procedure calls either P_SPED_LRE_MAIN_LIVE (before month five) or P_SPED_LRE_MAIN_LIVE_S2 (after month five) which calculates the placement for the child and inserts that calculation into the SPED_STUDENT_PLACEMENT table.

2.5. *P_SPED_LRE_LIVE_CALL5*

This procedure is used to calculate a SPED placement for a student in a Public school using the latest monthly record sent to MDE for districts 4001 – 5000 but not in (4100, 4120, and 4500. This procedure is to be run after each monthly processing has been done starting with month 1 and up until month 3. The first thing this procedure does is call another procedure named

P_SPED_STU_CNT_LIVE which updates the EMPLOYEE_PERIODS table with the number of SPED students in the course taught by that employee. Next, this procedure captures the latest month which has been COMPLETED by the district being processed. Last, this procedure calls either P_SPED_LRE_MAIN_LIVE (before month five) or P_SPED_LRE_MAIN_LIVE_S2 (after month five) which calculates the placement for the child and inserts that calculation into the SPED_STUDENT_PLACEMENT table.

2.6. *P_SPED_LRE_LIVE_CALL6*

This procedure is used to calculate a SPED placement for a student in a Public school using the latest monthly record sent to MDE for districts 5001 – 6000. This procedure is to be run after each monthly processing has been done starting with month 1 and up until month 3. The first thing this procedure does is call another procedure named P_SPED_STU_CNT_LIVE which updates the EMPLOYEE_PERIODS table with the number of SPED students in the course taught by that employee. Next, this procedure captures the latest month which has been COMPLETED by the district being processed. Last, this procedure calls either P_SPED_LRE_MAIN_LIVE (before month five) or P_SPED_LRE_MAIN_LIVE_S2 (after month five) which calculates the placement for the child and inserts that calculation into the SPED_STUDENT_PLACEMENT table.

2.7. *P_SPED_LRE_LIVE_CALL7*

This procedure is used to calculate a SPED placement for a student in a Public school using the latest monthly record sent to MDE for districts 6001 – 7000. This procedure is to be run after each monthly processing has been done starting with month 1 and up until month 3. The first thing this procedure does is call another procedure named P_SPED_STU_CNT_LIVE which updates the EMPLOYEE_PERIODS table with the number of SPED students in the course taught by that employee. Next, this procedure captures the latest month which has been COMPLETED by the district being processed. Last, this procedure calls either P_SPED_LRE_MAIN_LIVE (before month five) or P_SPED_LRE_MAIN_LIVE_S2 (after month five) which calculates the placement for the child and inserts that calculation into the SPED_STUDENT_PLACEMENT table.

2.8. *P_SPED_LRE_LIVE_CALL8*

This procedure is used to calculate a SPED placement for a student in a Public school using the latest monthly record sent to MDE for districts 7001 – 8000. This procedure is to be run after each monthly processing has been done starting with month 1 and up until month 3. The first thing this procedure does is call another procedure named P_SPED_STU_CNT_LIVE which updates the EMPLOYEE_PERIODS table with the number of SPED students in the course taught by that employee. Next, this procedure captures the latest month which has been COMPLETED by the district being processed. Last, this procedure calls either P_SPED_LRE_MAIN_LIVE (before month five) or P_SPED_LRE_MAIN_LIVE_S2 (after month five) which calculates the placement for the child and inserts that calculation into the SPED_STUDENT_PLACEMENT table.

2.9. *P_SPED_LRE_LIVE_CALL9*

This procedure is used to calculate a SPED placement for a student in a Public school using the

latest monthly record sent to MDE for districts 8001 – 9000 and in (2500, 2420, and 2400). This procedure is to be run after each monthly processing has been done starting with month 1 and up until month 3. The first thing this procedure does is call another procedure named P_SPED_STU_CNT_LIVE which updates the EMPLOYEE_PERIODS table with the number of SPED students in the course taught by that employee. Next, this procedure captures the latest month which has been COMPLETED by the district being processed. Last, this procedure calls either P_SPED_LRE_MAIN_LIVE (before month five) or P_SPED_LRE_MAIN_LIVE_S2 (after month five) which calculates the placement for the child and inserts that calculation into the SPED_STUDENT_PLACEMENT table.

2.10. *P_SPED_LRE_LIVE_CALL10*

This procedure is used to calculate a SPED placement for a student in a Public school using the latest monthly record sent to MDE for districts 9001 – 9999 and in (4100, 4120, and 4500). This procedure is to be run after each monthly processing has been done starting with month 1 and up until month 3. The first thing this procedure does is call another procedure named P_SPED_STU_CNT_LIVE which updates the EMPLOYEE_PERIODS table with the number of SPED students in the course taught by that employee. Next, this procedure captures the latest month which has been COMPLETED by the district being processed. Last, this procedure calls either P_SPED_LRE_MAIN_LIVE (before month five) or P_SPED_LRE_MAIN_LIVE_S2 (after month five) which calculates the placement for the child and inserts that calculation into the SPED_STUDENT_PLACEMENT table.

2.11. *P_SPED_LRE_LIVE_CALL1_ARCHIVE*

This procedure is used to calculate the ARCHIVE and DECSP SPED placement for a student in a Public school using the latest monthly record sent to MDE for districts 0000 - 1000. This procedure is to be run after the December snapshot has been taken and the ARCHIVE procedures have been filled. The first thing this procedure does is call another procedure named P_SPED_STU_CNT_LIVE_ARCHIVE which updates the ARCHIVE_EMPLOYEE_PERIODS table with the number of SPED students in the course taught by that employee. Next, this procedure captures the latest month which has been COMPLETED by the district being processed. Last, this procedure calls P_SPED_LRE_MAIN_LIVE_ARCHIVE which calculates the placement for the child and inserts that calculation into the DECSP_SPED_STUDENT_PLACEMENT table and the ARCH_SPED_STUDENT_PLACEMENT table.

2.12. *P_SPED_LRE_LIVE_CALL2_ARCHIVE*

This procedure is used to calculate a ARCHIVE and DECSP SPED placement for a student in a Public school using the latest monthly record sent to MDE for districts 1001 - 2000. This procedure is to be run after the December snapshot has been taken and the ARCHIVE procedures have been filled. The first thing this procedure does is call another procedure named P_SPED_STU_CNT_LIVE_ARCHIVE which updates the ARCHIVE_EMPLOYEE_PERIODS table with the number of SPED students in the course taught by that employee. Next, this procedure captures the latest month which has been COMPLETED by the district being processed. Last, this procedure calls P_SPED_LRE_MAIN_LIVE_ARCHIVE which calculates the placement for the child and inserts that calculation into the

DECSP_SPED_STUDENT_PLACEMENT table and the ARCH_SPED_STUDENT_PLACEMENT table.

2.13. *P_SPED_LRE_LIVE_CALL3_ARCHIVE*

This procedure is used to calculate a ARCHIVE and DECSP SPED placement for a student in a Public school using the latest monthly record sent to MDE for districts 2001 – 3000 but not in (2520, 2400, and 2420). This procedure is to be run after the December snapshot has been taken and the ARCHIVE procedures have been filled. The first thing this procedure does is call another procedure named P_SPED_STU_CNT_LIVE_ARCHIVE which updates the ARCHIVE_EMPLOYEE_PERIODS table with the number of SPED students in the course taught by that employee. Next, this procedure captures the latest month which has been COMPLETED by the district being processed. Last, this procedure calls P_SPED_LRE_MAIN_LIVE_ARCHIVE which calculates the placement for the child and inserts that calculation into the DECSP_SPED_STUDENT_PLACEMENT table and the ARCH_SPED_STUDENT_PLACEMENT table.

2.14. *P_SPED_LRE_LIVE_CALL4_ARCHIVE*

This procedure is used to calculate a ARCHIVE and DECSP SPED placement for a student in a Public school using the latest monthly record sent to MDE for districts 3001 – 4000. This procedure is to be run after the December snapshot has been taken and the ARCHIVE procedures have been filled. The first thing this procedure does is call another procedure named P_SPED_STU_CNT_LIVE_ARCHIVE which updates the ARCHIVE_EMPLOYEE_PERIODS table with the number of SPED students in the course taught by that employee. Next, this procedure captures the latest month which has been COMPLETED by the district being processed. Last, this procedure calls P_SPED_LRE_MAIN_LIVE_ARCHIVE which calculates the placement for the child and inserts that calculation into the DECSP_SPED_STUDENT_PLACEMENT table and the ARCH_SPED_STUDENT_PLACEMENT table.

2.15. *P_SPED_LRE_LIVE_CALL5_ARCHIVE*

This procedure is used to calculate a ARCHIVE and DECSP SPED placement for a student in a Public school using the latest monthly record sent to MDE for districts 4001 – 5000 but not in (4100, 4120, and 4500. This procedure is to be run after the December snapshot has been taken and the ARCHIVE procedures have been filled. The first thing this procedure does is call another procedure named P_SPED_STU_CNT_LIVE_ARCHIVE which updates the ARCHIVE_EMPLOYEE_PERIODS table with the number of SPED students in the course taught by that employee. Next, this procedure captures the latest month which has been COMPLETED by the district being processed. Last, this procedure calls P_SPED_LRE_MAIN_LIVE_ARCHIVE which calculates the placement for the child and inserts that calculation into the DECSP_SPED_STUDENT_PLACEMENT table and the ARCH_SPED_STUDENT_PLACEMENT table.

2.16. *P_SPED_LRE_LIVE_CALL6_ARCHIVE*

This procedure is used to calculate a ARCHIVE and DECSP SPED placement for a student in a Public school using the latest monthly record sent to MDE for districts 5001 – 6000. This

procedure is to be run after the December snapshot has been taken and the ARCHIVE procedures have been filled. The first thing this procedure does is call another procedure named P_SPED_STU_CNT_LIVE_ARCHIVE which updates the ARCHIVE_EMPLOYEE_PERIODS table with the number of SPED students in the course taught by that employee. Next, this procedure captures the latest month which has been COMPLETED by the district being processed. Last, this procedure calls P_SPED_LRE_MAIN_LIVE_ARCHIVE which calculates the placement for the child and inserts that calculation into the DECSP_SPED_STUDENT_PLACEMENT table and the ARCH_SPED_STUDENT_PLACEMENT table.

2.17. *P_SPED_LRE_LIVE_CALL7_ARCHIVE*

This procedure is used to calculate a ARCHIVE and DECSP SPED placement for a student in a Public school using the latest monthly record sent to MDE for districts 6001 – 7000. This procedure is to be run after the December snapshot has been taken and the ARCHIVE procedures have been filled. The first thing this procedure does is call another procedure named P_SPED_STU_CNT_LIVE_ARCHIVE which updates the ARCHIVE_EMPLOYEE_PERIODS table with the number of SPED students in the course taught by that employee. Next, this procedure captures the latest month which has been COMPLETED by the district being processed. Last, this procedure calls P_SPED_LRE_MAIN_LIVE_ARCHIVE which calculates the placement for the child and inserts that calculation into the DECSP_SPED_STUDENT_PLACEMENT table and the ARCH_SPED_STUDENT_PLACEMENT table.

2.18. *P_SPED_LRE_LIVE_CALL8_ARCHIVE*

This procedure is used to calculate a ARCHIVE and DECSP SPED placement for a student in a Public school using the latest monthly record sent to MDE for districts 7001 – 8000. This procedure is to be run after the December snapshot has been taken and the ARCHIVE procedures have been filled. The first thing this procedure does is call another procedure named P_SPED_STU_CNT_LIVE_ARCHIVE which updates the ARCHIVE_EMPLOYEE_PERIODS table with the number of SPED students in the course taught by that employee. Next, this procedure captures the latest month which has been COMPLETED by the district being processed. Last, this procedure calls P_SPED_LRE_MAIN_LIVE_ARCHIVE which calculates the placement for the child and inserts that calculation into the DECSP_SPED_STUDENT_PLACEMENT table and the ARCH_SPED_STUDENT_PLACEMENT table.

2.19. *P_SPED_LRE_LIVE_CALL9_ARCHIVE*

This procedure is used to calculate a ARCHIVE and DECSP SPED placement for a student in a Public school using the latest monthly record sent to MDE for districts 8001 – 9000 and in (2500, 2420, and 2400). This procedure is to be run after the December snapshot has been taken and the ARCHIVE procedures have been filled. The first thing this procedure does is call another procedure named P_SPED_STU_CNT_LIVE_ARCHIVE which updates the ARCHIVE_EMPLOYEE_PERIODS table with the number of SPED students in the course taught by that employee. Next, this procedure captures the latest month which has been COMPLETED by the district being processed. Last, this procedure calls

P_SPED_LRE_MAIN_LIVE_ARCHIVE which calculates the placement for the child and inserts that calculation into the DECSP_SPED_STUDENT_PLACEMENT table and the ARCH_SPED_STUDENT_PLACEMENT table.

2.20. *P_SPED_LRE_LIVE_CALL10_ARCHIVE*

This procedure is used to calculate a ARCHIVE and DECSP SPED placement for a student in a Public school using the latest monthly record sent to MDE for districts 9001 – 9999 and in (4100, 4120, and 4500). This procedure is to be run after the December snapshot has been taken and the ARCHIVE procedures have been filled. The first thing this procedure does is call another procedure named P_SPED_STU_CNT_LIVE_ARCHIVE which updates the ARCHIVE_EMPLOYEE_PERIODS table with the number of SPED students in the course taught by that employee. Next, this procedure captures the latest month which has been COMPLETED by the district being processed. Last, this procedure calls P_SPED_LRE_MAIN_LIVE_ARCHIVE which calculates the placement for the child and inserts that calculation into the DECSP_SPED_STUDENT_PLACEMENT table and the ARCH_SPED_STUDENT_PLACEMENT table.

2.21. *P_SPED_LRE_LIVE_DIST*

This procedure is used to calculate a SPED placement for a student in a Public school using the latest monthly record sent to MDE for a specific district. This procedure runs on an as-needed basis after district approvals is run to ensure that the update to date placement is available. The first thing this procedure does is call another procedure named P_SPED_STU_CNT_LIVE which updates the EMPLOYEE_PERIODS table with the number of SPED students in the course taught by that employee. Next, this procedure captures the latest month which has been COMPLETED by the district being processed. Last, this procedure calls either P_SPED_LRE_MAIN_LIVE (before month five) or P_SPED_LRE_MAIN_LIVE_S2 (after month five) which calculates the placement for the child and inserts that calculation into the SPED_STUDENT_PLACEMENT table.

2.22. *P_SPED_STU_CNT_LIVE*

This procedure calculates the number of SPED students for all periods in the EMPLOYEE_PERIODS table. This procedure UPDATES the EMPLOYEE_PERIODS SPED_STU_DEC_CNT field with the number of SPED kids in the course for any given district. This procedure is called by P_SPED_LRE_LIVE_CALL1-10 and P_SPED_LRE_LIVE_DIST. This does not update the PA_CLASSES table. The PA_CLASSES table does contain a field called SPED_LRE_REG_PCT which is the percentage of sped kids in the class.

2.23. *P_SPED_STU_CNT_LIVE_ARCHIVE*

This procedure calculates the number of SPED students for all periods in the ARCHIVE_EMPLOYEE_PERIODS table. This procedure UPDATES the ARCHIVE_EMPLOYEE_PERIODS SPED_STU_DEC_CNT field with the number of SPED kids in the course for any given district. This procedure is called by P_SPED_LRE_LIVE_CALL1-10_ARCHIVE. This does not update the ARCHIVE_PA_CLASSES table. The ARCHIVE_PA_CLASSES table does contain a field called SPED_LRE_REG_PCT which is the percentage of sped kids in the class.

2.24. *P_SPED_LRE_MAIN_LIVE*

This procedure does the actual LRE (placement) calculation using live student's and teacher's schedules. This procedure looks at the student's schedule to find the minutes for regular classes that SPED students are taking. It excludes any classes with a Semester/Term code of S2, T2, or T3. The placement category will then fall in SA, SB, or SC if the student has a schedule. If the student does not have a schedule for the district and school who currently owns the student then his placement will be 99. In order for the student to be calculated he/she must be in a public school, non 500, have a SPED indicator = 'Y' and be between the ages of 6 to 21. If an educational environment placement value exists then the procedure does not calculate or update the placement for that student if the value was entered by a user with a SPED Management user role or if any other user entered a value other than SA, SB, or SC. That value will be copied into the calculated placement field. If the student does NOT have a grade level then the placement will be 98. If the student has all '13' prefix courses, (SPED Courses), then the student will have a placement of SC. If there are two or more courses with the same period number then the procedure will make sure none of the courses are a '13' prefix course and then take the regular course with the largest number of minutes. After this the procedure will then get the total number of students in a course and the number of sped students in a course which was calculated by the P_SPED_STU_CNT_LIVE procedure. This will result in a percentage of SPED students in the course. This percentage will then be updated into the PA_CLASSES SPED_LRE_REG_PCT field. The number of all the minutes for all courses counted are then added up and calculated. Using this equation the procedure then calculates a percentage placement: (Total Regular Education Minutes + Recess/Break + Lunch)/(Instructional Time + Recess/Break + Lunch). If the student's percentage placement is 80 percent or greater then this student will be an SA. If the student's percentage is between 40 and 79 percent then the student will be an SB. If the student's percentage is less than 40 percent then the student will be an SC. If no educational environment placement exists, the procedure then DELETES any previous records out of the SPED_STUDENT_PLACEMENT table for that student in that year and inserts the new placement into the SPED_STUDENT_PLACEMENT table. If an educational environment placement exists, the SPED_STUDENT_PLACEMENT record is updated with the calculated placement value.

2.25. *P_SPED_LRE_MAIN_LIVE_S2*

This procedure does the actual LRE (placement) calculation using live student's and teacher's schedules. This procedure looks at the student's schedule (including the second semester classes) to find the minutes for regular classes that SPED students are taking. The PA_CLASSES SPED_LRE_REG_PCT field will be cleared for all classes in each student's schedule. This is to ensure that only the classes that were used in the calculation will display a percentage on the LRE Live Report. The following rules apply when deciding which classes to count:

1. Uses S2 and T3 Semester/Term codes only.
2. Only uses S1 Semester/Term code if there is no S2 for the same period.
3. Ignores all T1 and T2 codes.
4. Pulls T4 courses only when no S2 or T3 course without a final grade exists.
5. If the student has more than one of the same Period then:
    - If one period is S1 and one period is S2, uses S2.

- If there are multiple S2 periods, uses the non-SPED class with the greater minutes.
- If there is a combination of S2 and T3 periods, uses the non-SPED class with the greater minutes.

6. Attempts to match a student's schedule to a teacher's schedule with a 1-to-1 match.
   If no match is found, then attempts to match a student's S2 course to a teacher's S1 course based on course code, period number, teacher ssn, and year.
7. Ignores all courses with a final grade.

The placement category will then fall in SA, SB, or SC if the student has a schedule. If the student does not have a schedule for the district and school who currently owns the student then his placement will be 99. In order for the student to be calculated he/she must be in a public school, non 500, have a SPED indicator = 'Y' and be between the ages of 6 to 21. If an educational environment placement value exists then the procedure does not calculate or update the placement for that student if the value was entered by a user with a SPED Management user role or if any other user entered a value other than SA, SB, or SC. That value will be copied into the calculated placement field. If the student does NOT have a grade level then the placement will be 98. If the student has all '13' prefix courses, (SPED Courses), then the student will have a placement of SC. The procedure will then get the total number of students in a course and the number of sped students in a course which was calculated by the P_SPED_STU_CNT_LIVE procedure. This will result in a percentage of SPED students in the course. This percentage will then be updated into the PA_CLASSES SPED_LRE_REG_PCT field. The number of all the minutes for all courses counted are then added up and calculated. Using this equation the procedure then calculates a percentage placement: (Total Regular Education Minutes + Recess/Break + Lunch)/(Instructional Time + Recess/Break + Lunch). If the student's percentage placement is 80 percent or greater then this student will be an SA. If the student's percentage is between 40 and 79 percent then the student will be an SB. If the student's percentage is less than 40 percent then the student will be an SC. If no educational environment placement exists, the procedure then DELETES any previous records out of the SPED_STUDENT_PLACEMENT table for that student in that year and inserts the new placement into the SPED_STUDENT_PLACEMENT table. If an educational environment placement exists, the SPED_STUDENT_PLACEMENT record is updated with the calculated placement value.

2.26. *P_SPED_LRE_MAIN_LIVE_ARCHIVE*

This procedure does the actual LRE (placement) calculation using ARCHIVE student's and teacher's schedules. The procedure pulls students from DECSP_PA_STUDENTS to get the list of students and their district and schools since this is who owns as of the cutoff date. The ARCHIVE_LRE_PA_STUDENTS table is populated with the Personnel snapshot which is typically done later in December or January. This procedure looks at the student's schedule to find the minutes for regular classes that SPED students are taking. It excludes any classes with a Semester/Term code of S2, T2, or T3. The placement category will then fall in SA, SB, or SC if the student has a schedule. If he student does not have a schedule for the district and school then his placement will be 99. In order for the student to be calculated he/she must be in a public school, non 500, have a SPED indicator = 'Y' and be between the ages of 6 to 21. If an educational environment placement value exists then the procedure does not calculate or update

the placement for that student if the value was entered by a user with a SPED Management user role or if any other user entered a value other than SA, SB, or SC. That value will be copied into the calculated placement field. If the student does NOT have a grade level then the placement will be 98. If the student has all '13' prefix courses, (SPED Courses), then the student will have a placement of SC. If there are two or more courses with the same period number then the procedure will make sure none of the courses are a '13' prefix course and then take the regular course with the largest number of minutes. After this the procedure will then get the total number of students in a course and the number of sped students in a course which was calculated by the P_SPED_STU_CNT_LIVE_ARCHIVE procedure. This will result in a percentage of SPED students in the course. This percentage will then be updated into the ARCHIVE_PA_CLASSES SPED_LRE_REG_PCT field. The number of all the minutes for all courses counted are then added up and calculated. Using this equation the procedure then calculates a percentage placement: (Total Regular Education Minutes + Recess/Break + Lunch)/(Instructional Time + Recess/Break + Lunch). If the student's percentage placement is 80 percent or greater then this student will be an SA. If the student's percentage is between 40 and 79 percent then the student will be an SB. If the student's percentage is less than 40 percent then the student will be an SC. If no educational environment placement exists, the procedure then DELETES any previous records out of the ARCH_SPED_STUDENT_PLACEMENT table for that student in that year and INSERTS the new placement into the ARCH_SPED_STUDENT_PLACEMENT table. If an educational environment placement exists, the ARCH_SPED_STUDENT_PLACEMENT record is updated with the calculated placement value. This procedure also UPDATES the DECSP_SPED_STUDENT_PLACEMENT table. If an educational environment placement exists, the DECSP_SPED_STUDENT_PLACEMENT record will be UPDATED vs. DELETED AND INSERTED in the following situations. If the record is not a user entered placement and the modify/create user is not a SPED ADMINISTRATOR then the procedure will DELETE and INSERT into the DECSP_SPED_STUDENT_PLACEMENT table too. The only exception for this INSERT and DELETE is if the user is MDEREP. If the modify/create user is MDEREP the placement will be INSERTED and DELETED from DECSP_SPED_STUDENT_PLACEMENT.

The reason why both placement tables are updated is because the Post Cutoff screens updates the DECSP_SPED_STUDENT_PLACEMENT table but we must use the Month 3 student schedules and approved teacher schedules which are not approved until the Personnel snapshot is taken in late December or early January and the ARCHIVE tables are populated. So the ARCHIVE tables are used as the source to calculate LRE and the calculated values are inserted into the ARC_SPED_STUDENT_PLACEMENT and DECSP_SPED_STUDENT_PLACEMENT table which contains the user entered placement. All of the Post Cutoff screens, reports and the P_FILL_FED_SPED_DATA procedure use the DECSP_SPED_STUDENT_PLACEMENT as its source.

3. Intervention

Intervention student records are stored in the SPED_STUDENT_INTERVENTION table, grouped by year. Intervention students are entered through the nightly Intervention procedure

and also through the Intervention Update screen. The Intervention procedure will pull students in based on a specific set of rules. A student will be pulled into Intervention if they meet any of the following:

A. Grades 1-3: A student has failed one (1) grade
B. Grades 4-12: A student has failed two (2) grades, one of which being the preceding year
C. A student failed either of the preceding two grades and has been suspended or expelled for more than twenty (20) days in the current school year.
D. A student scores at the Minimal level on any part of the Grade 3 or Grade 7 Mississippi Curriculum Test 2

A student may also be referred to Intervention and added using the screen. Intervention students can be viewed on the Intervention screen and reports for all years where data exists, but updates can only take place for the current schoolyear.

Intervention students are displayed on the screen grouped by the district and school that currently owns the student. This is determined by looking at the district approval records, withdrawals, and enrollments. The SPED_STUDENT_INTERVENTION table does not contain any information related to the students' location or ownership. At the beginning of the schoolyear, if the district chosen has not completed Month 1 processing, then the screen will use the SCHOOL_STUDENT_OWNERSHIP table to determine which students are owned by the district and school for the new schoolyear.

3.1. *Language/Speech Impaired Students*

Students with disabilities other than LS (Language/Speech Impaired) will not be added to Intervention by the Intervention Package. Special Education students with an LS disability will be pulled into Intervention if they meet any of the same requirements for non-SPED students.

LS students will be identified on the screen by and L/S Indicator field. This field will also display on the reports. The L/S Indicator is stored in the LS_IND field of the SPED_STUDENT_INTERVENTION table. The Parent Permission to Serve, Parental Consent to Evaluate, and the Eligibility Decision fields will be automatically set to Yes and will be disabled on the Intervention Screen.

If at any time an LS student changes his or her primary disability, they will be removed from Intervention on the night following the change when the main Intervention procedure runs.

3.2. *Removing Intervention Students*

Students are removed from the Intervention table in the following situations:

1. When an L/S student changes his or her primary disability
2. When a student does not return to school in Month 1 of a new schoolyear
3. When a student drops out (withdrawal code of D)
4. When a student moves out of state or to a non-public school (withdrawal code of T4, T5, or T8)

5. When a SPED Management user manually deletes an Intervention student using the screen

When a student is removed from Intervention in any of the above situations, the deleted record will be copied and inserted into the SPED_STUDENT_INTER_REMOVED table.

3.3. *Intervention Package*

33..1. F_PROMOTED_LAST_YEAR_IND Function

This function determines if a single student failed the previous schoolyear. It is used by the P_SPED_INTERVENTION_MAIN procedure and also by the Intervention screen

33..2. P_GET_DAYS_SUSPENDED Procedure

This procedure returns the number of days suspended for the selected school year and the start date that cumulated the 20 days suspended days. It is used by the P_SPED_INTERVENTION_MAIN procedure, the Intervention screen, and the Intervention Compliance Report

33..3. P_PREV_REFERED_CHK Procedure

This procedure returns an indicator and a date if a student was previously referred to Intervention. It is used by the P_SPED_INTERVENTION_MAIN procedure and also by the Intervention screen

33..4. P_GET_REFERRAL_STUDENTS Procedure

This procedure will insert student records into the RPT_DATA_FIELDS table with a specific batch ID and these records will be displayed on the Intervention screen. If an MSIS Student ID is passed into the procedure, the procedure will recognize this as a referral student and only populate the table with one record for that student. If no MSIS Student ID is passed to the procedure, the list will contain all Intervention students for a specific district, school, and schoolyear. This procedure is only used by the Intervention Screen

33..5. P_GET_INTERVENTION_CHECK

This procedure receives different dates as input and determines if the dates are in compliance with set rules. Examples are dates entered for Referred to TST Date must not be weekend days or fall on any non-school days such as holidays. Dates such as IEP and Eligibility Dates have other restrictions. This procedure is used by the Intervention Compliance Report.

33..6. P_GET_FORM_DATE_CHECK

This procedure receives a start date, an end date, and a user-entered date. The procedure will determine if the user-entered date is valid by ensuring it does not fall on a non-school day such as a holiday or weekend and that it is between the start date and end date. This procedure is used by the Intervention Screen

33..7. P_SPED_INTERVENTION_MAIN

This procedure is responsible for adding students to the Intervention table. It also removes L/S students whose disability has changed, and students who have dropped out or transferred out of state or to a non-public school. This procedure runs at the beginning of the schoolyear and also nightly. The procedure will update or insert a student's Intervention record. It will not update any student's record if a Referred to TST Date has been entered, or if the student is a Referral or Child Study student. It will determine which rule the student pulls into Intervention under, and will record that in the Intervention table. It will also enter the Referred to Intervention Date, which is either the first day or school or the date that 20 days of suspension starting accumulating. If a student was previously referred to Intervention, that date will be entered. The number of days a student has been suspended and the promotion indicator for last year will also be entered. The comments field of the Intervention table will be updated with which grades were failed. If the student is L/S, the L/S indicator will be updated and the Parent Permission to Serve, Parental Consent to Evaluate, and the Eligibility Decision fields will be automatically set to Yes. The procedure will not run for any district that has started month 9 processing until the next schoolyear begins.

33..8. P_GET_SUMMERACT_INV_STUDENTS

This procedure will remove students from the Intervention table who were enrolled in Month 9 of the previous year, but do not return in Month 1 of the current schoolyear. This procedure must run after the summer activity process completes.

3.4. *Intervention Screen*

The Intervention Screen allows users to view and update Intervention data. SPED Management users can also delete records using the screen. Upon entering the screen, users must select a district and school to query. Once users navigate to the second tab of the screen, the screen will automatically query all current Intervention students that belong to the selected district and school. The user may change the schoolyear selected and the screen will display the students for that year, but no updates can take place on those records. If the user wishes to refer a student to Intervention, they must change the radio button to Referral Students, at which time they will be instructed to enter a MSIS Student ID to query. The student will only be successfully queried if they are an L/S SPED or non-SPED student owned by the selected district and school.

Field Edits:

- Type of Referral – Only required when student is referred to Intervention – choices are Child Study or Intervention
- Referred to TST Date – This field is REQUIRED for all students EXCEPT students referred directly to Child Study. When entered, the date must be between the open date for students and the close date for teachers. It must be a school day (no holidays, breaks, or weekends).
- TST Decision Date – This field is REQUIRED for all students EXCEPT students referred directly to Child Study. When entered, the date must be between the

Referred to TST date and the close date for teachers. It must be a school day (no holidays, breaks, or weekends).

- Intervention Success – Required if TST Decision Date is present.
- LSC Referral Date – This field is required for students referred to Child Study and students whose Intervention Success is 'No' or 'Yes, Referred to Child Study'. This field will be disabled for L/S students. The date will be validated if entered. For Child Study students, the date must be between July 1 and June 30 of the specified schoolyear and it must be a school day (no holidays, breaks, or weekends). For all other Intervention students, the date must be between the TST Decision Date (OR Referred to Intervention Date if no TST Decision Date is present) and the end of the specified schoolyear (June 30).
- LSC Response – This field is required for all students with an LSC Referral Date. The choices are: Referred for Comprehensive Assessment, Remains in Regular Education, and Referred Back to TST. This field will be disabled for L/S students.
- LSC Response Date – This field is required for all students with an LSC Response. The date must be between the LSC Referral Date and the close date for teachers. It must be a school day (no holidays, breaks, or weekends). This field will be disabled for L/S students.
- Parental Consent to Evaluate – This field is not required. This field will be disabled for L/S students and set to Yes by default. This field will also be disabled for students whose LSC Response is Remains in Regular Education or Referred Back to TST.
- Parental Consent to Evaluate Date – This field is required for all students with a Parental Consent to Evaluate value of Yes. This field will be disabled for L/S students. The date must be between the LSC Response Date and the close date for teachers. It must be a school day (no holidays, breaks, or weekends).
- Eligibility Decision – This field is not required. This field will be disabled for L/S students and set to Yes by default.
- Parent Permission to Serve – This field is not required. This field will be disabled for L/S students and set to Yes by default.
- Eligibility Date – This field is not required. This field will be disabled for L/S students. This field will only be enabled when the Parental Consent to Evaluate, the Eligibility Decision, and the Parent Permission to Serve are all set to 'Yes'. It cannot be entered before the LSC Referral Date is entered and cannot be earlier than the Parental Consent to Evaluate Date.
- IEP Date – This field is not required. This field will be disabled for L/S students. This field will only be enabled when the Parental Consent to Evaluate, the Eligibility Decision, and the Parent Permission to Serve are all set to 'Yes'. It cannot be entered before the Eligibility Date is entered and cannot be earlier than the Eligibility Date.

3.5. *Intervention Reports*

53..1. Student Intervention Report Roster

The Student Intervention Report runs for a specific district and school. It lists all Intervention students that the school currently owns. Enrollments and withdrawals are taken into consideration when determining ownership. If a student has a transfer record for another school in the state, but does not have a corresponding enrollment record for the new school, the student's name will be noted with the plus (+) symbol. This serves to alert the school that they were the last school to have ownership of the student. Since there is no new enrollment record, this is the only school in which to report these students until their transfer is complete or altered. The information displayed on the report comes from the SPED_STUDENT_INTERVENTION table.

53..2. Student Intervention Compliance Report

The Student Intervention Compliance Report runs for a specific district and school. It lists all Intervention students that the school currently owns. Enrollments and withdrawals are taken into consideration when determining ownership. If a student has a transfer record for another school in the state, but does not have a corresponding enrollment record for the new school, the student's name will be noted with the plus (+) symbol. This serves to alert the school that they were the last school to have ownership of the student. Since there is no new enrollment record, this is the only school in which to report these students until their transfer is complete or altered. The report contains the students' names, MSIS IDs, their type of referral, type of Intervention, and L/S Indicator. The report also contains the each student's compliance for Referral to TST, TST Decision Date, Intervention Success, Eligibility Date, and IEP Date. Compliance values of 'Yes' indicate that data has been entered and is valid. Compliance values of 'No' indicate that either a) Data was entered and is not valid or b) Data was not entered and the deadline has passed or other criteria has not been met. Compliance values that are blank on the report indicate that the data is not required. Compliance values that are 'N/A' indicate that the data is required and that the deadline has not passed or other data must be entered first.

Compliance is determined as follows:

- Referral to TST – The start date of compliance will be the open date for students, the date of the accumulation of 20 suspension days for Criteria 3 students, or the Intervention record create date for Criteria 4 only students. If the date has not been entered 20 school days after the start date, then the date is NOT in compliance. If the date on which the report runs is not 20 school days past the starting date and no date has been entered, the field will be 'N/A'. If the date has been entered, then it must be within 20 days of the start date. If the date has been entered, it also must be a school day (no holidays, breaks, or weekends). This field will always be blank for Child Study students.
- TST Decision Date – If the date has been entered, it must be no more than 18 weeks after the Referral to TST date. If the date has been entered, it also must be a school day (no holidays, breaks, or weekends). If the date has not been entered

and the Referral to TST date has not been entered in the allotted time, then the TST Decision Date compliance will be 'N/A'. If the Referral to TST date has been entered, then the TST Decision Date will NOT be in compliance if it is not entered within 18 weeks of the Referral to TST date. If the deadline for the date is not yet passed, then the field will be 'N/A'. This field will always be blank for Child Study students.

- Intervention Success – If the Intervention Success has been entered, then the field is in compliance. Otherwise, it is not. This field will always be blank for Child Study students.
- Eligibility Date – If Parental Consent to Evaluate, Parent Permission to Serve, and Eligibility Decision are all 'Yes', then this field will be tested for compliance. If any of the above fields are 'No' or blank, the compliance field for Eligibility Date will be blank. The compliance field will also be blank if the LSC Response for a student is either 'Remains in Regular Ed' or 'Referred Back to TST' or if the Intervention Success value is 'Yes – Remains in Regular Ed'. If a student is L/S and is not an initial ruling, this field will be 'Yes'. If the Eligibility Date has not been entered and the Parental Consent to Evaluate, Parent Permission to Serve, and Eligibility Decision are all 'Yes', this field will be 'No'. If the Eligibility Date has been entered, then it must be within 60 calendar days of the Parental Consent to Evaluate Date. If the Parental Consent to Evaluate, Parent Permission to Serve, and Eligibility Decision values have not been entered, the field will be 'N/A'.
- IEP Date - If Parental Consent to Evaluate, Parent Permission to Serve, and Eligibility Decision are all 'Yes', then this field will be tested for compliance. If any of the above fields are 'No' or blank, the compliance field for IEP Date will be blank. The compliance field will also be blank if the LSC Response for a student is either 'Remains in Regular Ed' or 'Referred Back to TST' or if the Intervention Success value is 'Yes – Remains in Regular Ed'. If a student is L/S and is not an initial ruling, this field will be 'Yes'. If the Eligibility Date has not been entered and the Parental Consent to Evaluate, Parent Permission to Serve, and Eligibility Decision are all 'Yes', this field will be 'No'. If the IEP Date has been entered, then it must be within 30 calendar days of the Eligibility Date. If the Parental Consent to Evaluate, Parent Permission to Serve, and Eligibility Decision values have not been entered, the field will be 'N/A'.

53..3. State Student Intervention Report Roster

This report contains a list of all Intervention students in the state. The students are grouped by District and School according to which school owns them. Enrollments and withdrawals are taken into consideration when determining ownership. If a student has a transfer record for another school in the state, but does not have a corresponding enrollment record for the new school, the student's name will be noted with the plus (+) symbol. This serves to alert the school that they were the last school to have ownership of the student. Since there is no new enrollment record, this is the only school in which to report these students until their transfer is complete or altered. The information displayed on the report comes from the SPED_STUDENT_INTERVENTION table.

Due to the size and running time of this report, the supporting procedure P_RPT_1494_FILL_TBL has been developed that runs every weekend to insert data for the report into a table, RPT_STATE_INTERVENTION. This procedure groups Intervention students with the school that has ownership. The report simply pulls the data straight from the RPT_STATE_INTERVENTION table. If any changes are made during the week, they will not appear on the state report until after the following weekend. This procedure runs after the Intervention procedure.

4. Student Update Screens

Recent changes to the business rules for the Student Update Screens are detailed below. This is NOT an exhaustive list of all business rules for these screens.

4.1. *Public Student Update Screen (Pre and Post Cut Off)*

When entering data on this screen, users are allowed to view records without being required to enter required fields. Once a change is made to any field, validations will take place on all required fields. Fields are only required when services have not been completed for a student.

Field Edits:

- IEP Date – Required field. This date may not be in the future, before a student's birthdate, more than one year prior to the cutoff date, or after the cutoff date when the cutoff date has not yet passed. The user will not be able to exit or save the current record until entering a value.
- Eligibility Date – Required field. This date may not be in the future, before a student's birthdate, more than three years prior to the cutoff date, or after the cutoff date when the cutoff date has not yet passed. The user will not be able to exit or save the current record until entering a value.
- Graduation Track – Required field for students in grades 9, 10, 11, 12, 58, and 78. The user will not be able to exit or save the current record until entering a value. This field is not visible for students who are between the ages of 3 and 5 on or before the cutoff date.
- Program Type – Not Required. This field is only visible/enabled for students who are between the ages of 3 and 5 on or before the cutoff date.
- Service Completed – Required field. The user will not be able to exit or save the current record until entering a value.
- Transition Services – Required field for students who are age 16 or older on or before the cutoff date. The user will not be able to exit or save the current record until entering a value.
- Primary Disability – Required field. The user will not be able to exit or save the current record until entering a value.
- Primary Disability Specific Area and OHI Description – Required field only when the primary disability selected requires one or more specific areas to be identified. The

user will not be able to exit or save the current record until entering the required number of values.

- Primary Disability Teacher SSN – Required field. The SSN must map to an active employee record for the district and schoolyear. The user will not be able to exit or save the current record until entering a value.
- MSIS Calculated Placement – Not required. This field is disabled for all users except SPED Management Users. When any other user updates the Educational Environment field to anything other than SA, SB, or SC, then this field will populated with that value when the record is saved. This indicates that the LRE procedure should not calculate a placement for this student. The value selected must be valid for the age of the child.
- User Entered: Educational Environment from IEP – Required field. The value selected must be valid for the age of the child. If the value selected differs from the MSIS Calculated Placement (if it exists), the user will receive a warning that two values differ but this will be allowed.
- DECSP Reporting Placement – This field is not enabled. It displays the placement value that is reported to federal government. For schoolyear 2007 and beyond, this is the Educational Environment. For years before, it may be the calculated or user entered placement, depending on which one exists.

4.2. *Non-Public Student Update Screen (Pre and Post Cut Off)*

When entering data on this screen, users are allowed to view records without being required to enter required fields. Once a change is made to any field, validations will take place on all required fields. Fields are only required when services have not been completed for a student.

When a student transfers from a public school to a non-public school, their public schedule may be left active. When the student is queried on this screen, any courses for the current schoolyear that are not related to the district and school the student is now in will be marked inactive.

Field Edits:

- IEP Date – Required field. This date may not be in the future, before a student's birthdate, more than one year prior to the cutoff date, or after the cutoff date when the cutoff date has not yet passed. The user will not be able to exit or save the current record until entering a value.
- Eligibility Date – Required field. This date may not be in the future, before a student's birthdate, more than three years prior to the cutoff date, or after the cutoff date when the cutoff date has not yet passed. The user will not be able to exit or save the current record until entering a value.
- Graduation Track – Required field for students in grades 9, 10, 11, 12, 58, and 78. The user will not be able to exit or save the current record until entering a value. This field is not visible for students who are between the ages of 3 and 5 on or before the cutoff date.

- Program Type – Not Required. This field is only visible/enabled for students who are between the ages of 3 and 5 on or before the cutoff date.
- Service Completed – Required field. The user will not be able to exit or save the current record until entering a value.
- Transition Services – Required field for students who are age 16 or older on or before the cutoff date. The user will not be able to exit or save the current record until entering a value.
- Primary Disability – Required field. The user will not be able to exit or save the current record until entering a value.
- Primary Disability Specific Area and OHI Description – Required field only when the primary disability selected requires one or more specific areas to be identified. The user will not be able to exit or save the current record until entering the required number of values.
- Primary Disability Teacher SSN – Required field. The SSN must map to an active employee record for the district and school year. The user will not be able to exit or save the current record until entering a value.
- User Entered: Educational Environment from IEP – Required field. The value selected must be valid for the age of the child.
- DECSP Reporting Placement – This field is not enabled. It displays the placement value that is reported to federal government. For school year 2007 and beyond, this is the Educational Environment. For years before, it may be the calculated or user entered placement, depending on which one exists.
- Grade Level – Required field. For students who are between the ages of 3 or 4 as of September 1st of the school year, their grade level must be 52 or 62 only.

5. New Reports

5.1. *Missing Placement Report (Pre and Post Cut Off)*

This report contains a list of students in school 500 and students ages 3-5 on or before the cutoff date that do not have user entered placement defined. The report can run at the school, district, or state level. The report contains the student's name, MSIS Id, date of birth, age, race, gender, grade, and disability.

5.2. *Transition Services Report (Pre and Post Cut Off)*

This report contains a list of students who are age 16 on or before the cutoff date who do not transition services defined. The report can run at the school, district, or state level. The report contains the student's name, MSIS Id, date of birth, age, race, gender, grade, and disability, and transition services.

5.3. *Placement Difference Report (Pre and Post Cut Off)*

This report contains a list of students whose calculated placement does not match their user-entered Educational Environment placement. Both values must exist in order for the student to be reported. This report can run at the school, district, or state level. The report contains

the student's name, MSIS Id, date of birth, age, race, gender, grade, disability, educational environment, and calculated placement.

5.4. District Data Profile

This report contains information and statistics about every District. There is also a state-level report. There is a background procedure P_RPT_DISTRICT_DATA_PROFILE that must run to calculate the statistics for this report prior to running. The report runs from the MSIS menu. There are five sections on this report:

- Population Description – Total Student Enrollment, Number of Students with Disabilities, Percent of Students with Disabilities, Percent of Students with Disabilities excepting those with Language/Speech Impairments, Percent of Students with Low Incidence Disabilities, Percent of Students Enrolled who are Black, and Percent of Students Enrolled in Other Racial/Cultural Groups are listed.
- Child Identification – For each disability, the Percent of Students with Disabilities by Disability and Students with Disabilities as a Percent of Total Enrollment are listed.
- Disproportionate Differentials – Percent of Black Students with Educable Mental Retardation, Percent of Other Students with Educable Mental Retardation, Differential for Educable Mental Retardation, Percent of Black Students with Specific Learning Disabilities, Percent of Other Students with Specific Learning Disabilities, and Differential for Specific Learning Disabilities are listed.
- Educational Environments – Students placed in each educational environment as a percentage of All Student with Disabilities, All Students with Disabilities except speech/language, and Low Incidence Disabilities are listed. The educational environments are Regular/General Education, Receiving Special Education Services in a Resource Special Education Class, and Separate/Self-Contained Special Education Classes. Each of the environments list percentages for ages 6 – 21, 6 – 12, and 12 – 17.
- Spring Statewide Assessment (MCT) – The Percent Participating at On-Level Assessment and Out of Level Assessment are listed. The Percent Proficient and Advanced for 3rd, 5th, and 7th grade Reading and Math are also listed. All Percentages are given for Students with Disabilities and Students without Disabilities.

5.5. Ranking Report

This report is a Comma Separated File that contains statistics for every district. There is a file for EMD, SLD, EMR, and OHI. The files contain counts for students of every race, a total count of students with the corresponding disability, month one net membership totals, child count totals, percentage of students with that disability per net membership and per child count, and monitoring data for the past four years. The EMD and OHI files have slightly different statistics listed. The procedure P_SPED_RANKING_REPORT generates all of the files.

6. Part C to B

The Special Education department receives a monthly file from the Department of Health which contains students who transition to the responsibility of MDE on their third birthday. The Health

department is responsible for uploading a file to MDE on a monthly process of the students who will be turning 3 years old within 6 months. This data is imported into the MSIS database so the districts have the ability to see the student that they might be serving in the near future.

6.1. Upload Application Information

This is the URL that the Health Department uses to upload a file to MDE:
https://sped.mde.k12.ms.us/MDEFileUpload/login.aspx

The file is uploaded to a MS Windows NT server located in the MIS Server room:

- Server is on Omniview switch port #5
- Server name - specedftp
- Server IP address - 172.16.10.250

Batch file process (partc2bFileProcess.bat) moves the file from the C:\MDEFileUploads\ folder to the C:\Inetpub\ftproot\IN\ folder that can be accessed via FTP. The batch file (partc2bFileProcess.bat) is scheduled to run Monday – Friday at 5:00 PM.

The upload application is written in .NET and resides on the MS Windows NT server in the C:\Inetpub\wwwroot\MDEFileUpload\ folder.

6.2. MSIS Information

There are several scripts, procedures, screen, reports that are used to process the Part C to B data

26..1. Shell Scripts

There are four scripts that reside on the MSIS Database Server in the /u02/local/sh folder:

- *ftp_poll_partc2b.sh* – This script logs in to the MS Windows NT server via ftp and gets all of the data files that have been uploaded to the server. It also kicks off the run_SPED_Grant.sh script once the file(s) are retrieved. **This script is scheduled on the CRON to run every day at 8:00 PM.
- *run_SPED_Grant.sh* – This script executes the P_SPED_LOAD_CTOBDATA procedure on the MSIS Database which loads the file into the Part C to B table.
- *run_SPED_GrantMatch.sh* – This script executes the P_SPED_PARTC2B_MATCH procedure on the MSIS Database. It will take the students in the SPED_PART_C2B table for the specified school year and attempt to match them to a student in the PA_STUDENTS table and pull the MSIS ID and District Number to the SPED_PARTC2B_DATA table.
- *run_SPED_GrantFedMatch.sh* – This script executes the P_SPED_PARTC2B_FED procedure on the MSIS Database. It will take the students in the SPED_PART_C2B table that have a MSIS ID and attempt to match them to students in the December 01 count data.

26..2. Database Procedures

There are three procedures that reside in the MSIS Database. These procedures can be executed by using the shell scripts or manually.

- *P_SPED_LOAD_CTOBDATA* – This procedure reads the EXT_CTOB_DATA table and performs a few edit checks. If the edits pass, then the student is loaded into the SPED_PART_C2B table for the specified school year that is calculated using the student's birthday. This procedure can be executed by running the run_SPED_Grant.sh script.
- *P_SPED_PARTC2B_MATCH* – This procedure reads the SPED_PART_C2B table and attempts to match any student who is missing a MSIS ID. The match criteria is a complete match on lastname, date of birth, gender and a partial first four characters of the firstname to a student in the PA_STUDENTS table. If a match is found then the MSIS ID, District Number, and School Number are updated in the SPED_PART_C2B table.
- *P_SPED_PARTC2B_FED* – This procedure is used to update the SPECED_SERVED field in SPED_PART_C2B, if the student is in the FED_SPED_STUDENT_DATA table for the year. If the MSISID is in the table, then the indicator is set to Y else it is set to N.

26..3. MSIS Screen and Reports

There is one screen for the Part C to B data where the Special Education user can modify the data for the students. There are five reports that are used to analyze the data for the Part C to B students.

- *Part C to B Student Update screen* – This screen is located on the menu Modules-> Special Education -> Part C to B Student Update. The screen is only accessible to users with the Special Education role. This screen is used to maintain the Part C to B student data.

- *Monthly Student Roster* - Lists any student who is assigned to that district and any student whose LEA is that district number. This is basically every student that comes across in the Health file.

- *Student Match Roster* - List any student who is assigned to the district running the report and the Removed indicator is not selected. This is basically anyone who has been picked up by a District and we matched during the procedure run and populated the MSISID OR any student that has been manually assigned via the screen.

- *Student No Match Report* - List any student who has a LEA OR District Number equal to the District running the report and the MSIS ID is missing and the Removed indicator on the student is not selected. These students have not matched any students in MSIS.

- *Yearly Special Education Student Match* - List any student who is assigned to the district running the report, and their Spec Ed Served indicator = Yes and the

Removed indicator is not selected. These are the students who matched on MSISID to a student in the FED_SPED table for the school year.

- *Yearly Special Education Student No Match* - List any student who is assigned to the district running the report, and their Spec Ed Served indicator = No and the Removed indicator is not selected. These students were matched to a student in MSIS and have a MSIS ID and District but they did not show up in the FED_SPED table (Dec 1 count) for that school year.

7. District Monitoring

Districts are monitored for compliance with certain regulations and indicators to determine their compliance with those regulations. If districts are found to be out of compliance, they must take certain steps (Improvement Plan, etc.) to come back into compliance or risk penalties such as sanctions. New modules were developed in MSIS to track these monitoring activities and the compliance of any findings.

7.1. MSIS Screens and Reports

- *District Monitoring Update Screen* – Monitoring Activities are initiated on this screen and updated through that activity's life span. Information about each monitoring visit is collected along with any findings and/or sanctions and the district's compliance in correcting those findings.
- *District Monitoring Maintenance Screen* – This maintenance screen is used to update Monitoring Types, Monitoring Areas, LEA Determinations, Regulation Codes, Sanction Codes, and Sanction Sub Codes.
- *District Monitoring Compliance Report* – This report lists all District Monitoring Activities in which a finding occurred. The report will list the compliance for each finding and also the Improvement Plan compliance. Districts have 12 months to correct findings and complete the Improvement Plan. The 12 month period begins with notification date for findings compliance and the Improvement Plan start date for Improvement Plan compliance.
- *District Monitoring Roster Report* – This report lists all District Monitoring Activities for a given year and can run for one district or all. All of the detail information about the Monitoring visit and findings is displayed.
- *District Monitoring Roster by District Report* – This report is the same report as the District Monitoring Roster Report but runs across years for one district. It runs from the update screen.
- *District Monitoring Maintenance Report* – This report is a listing of all District Monitoring Maintenance codes and runs from the District Monitoring Maintenance screen.

8. University Based Student Import and Update

University Based students that do not exist in MSIS are imported into the fed_sped_student_data table using this process. The students that are pulled in are indicated as such in the fed_sped_student_data. The user_entered column will have a 'Y' for these students and their MSISID will be generated in the format of UBYYXXXX, where YY is the current schoolyear and XXXX is sequence-generated number. The data to be imported will be provided from outside sources and formatted by MDE staff in a comma-delimited file named "ubsubdata.txt". The process will send an email to MDE personnel containing the results of the import and any errors.

Please follow the instructions below for loading the University based data to the database:

Delete the files ubext.bad and ebext.log from the /u02/local/SPED_DIR folder - The .bad file will not be overwritten if no errors exist (need to clear old data). The log file will be appended on every run unless it is deleted – this is not necessary, but will make it easier to read and take less space on the server.

The file should be in CSV format (from excel) but with the name "ubsubdata.txt". Save as csv and then renaming will keep the csv format.
This file is used by the "UB_PLACEMENTS_SUB" table for external data.

Ftp the "ubsubdata.txt" file to /u02/local/SPED_DIR folder.

After that execute the procedure "proc_to_call_ub_csv_ld.txt"
Set the year value before running the procedure.

```
/*Contents of proc_to_call_ub_csv_ld.txt */
/*Before running this procedure ftp the university based csv file to SPED_DIR folder with the
name ubsubdata.txt
Set the year corresponds to the file / current year.
*/
SET SERVEROUTPUT ON SIZE 1000000
CALL DBMS_JAVA.SET_OUTPUT(1000000);
DECLARE
  P_YEAR NUMBER;
BEGIN
  P_YEAR := 2006;

--initlog.sh file appends the log files to a backup files for history.
  host_command('/u02/local/SPED_DIR/initlog.sh');

  P_INS_FED_SPED_DATA_CSV2(P_YEAR => P_YEAR);


--Following shell scripts emails the log files created during the above procedure and the
contents of ub_error_log table.
```

host_command('/u02/local/SPED_DIR/mail_log.sh');
host_command('/u02/local/SPED_DIR/chk_err_log.sh');

END;

8.1. MSIS Screens

- *University Based Student Update* – This screen allows SPED Management users to update information about the students that were imported. Students can also be removed using this screen. The only tables that will be updated by this screen are fed_sped_student_data and fed_sped_disability_sub_codes.
- *University Based District Update* – This maintenance screen allows SPED Management users to indicate which districts in MSIS are University Based districts. Only these districts will be shown on the Student Update Screen.

9. Special Education Post-Secondary Student Update

This screen is used to enter information about Special Education students who graduated in the previous schoolyear. Districts will indicate if each student has become Competitively Employed or Enrolled in some type of Post-Secondary school or both within one year of leaving high school.

9.1. MSIS Screen and Report

- *Special Education Post-Secondary Student Update Screen* – This screen queries all students that were in Special Education and graduated in the chosen schoolyear. Districts may then enter information for each student to indicate if they were competitively employed, enrolled in a post-secondary school, both, or if the information is unknown. Districts can also enter comments for each student.
- *Special Education Post-Secondary Report* – This report displays the information from the update screen and is run from the update screen.

10. Special Education Calendar

Listed below is a school year calendar that lists the items that are needed to be executed and/or completed by the Special Education department, MSIS users, and MIS throughout the year.

New School Year Information

- These procedures are run to populate the database
  - Districts continue to roll their Personnel data
  - Special Education Student data is rolled the next night for the district once the new school year has started (`P_Sped_Roll_Stu_Data`)
    - Special Education Student data is rolled for all of the districts that rolled before the end of the school year at this time also

- Intervention population procedure
- Roll Ownership data (`Update_School_Student_Ownership`)

July

- Part C to B file is submitted by the Health Department and processed monthly
  - **Monday – Friday 5:00 PM– the batch file is scheduled to move files on the Special Ed Grant NT server**
  - **Everyday 8:00 PM – ftp script is scheduled on the CRON to process Part C to B files**

After Month 1 processing

MIS Responsibilities
- Run Intervention student removal procedure (P_GET_SUMMERACT_INV_STUDENTS)

August – before December 1 cutoff

MSIS Users
- Enter the User Entered Placement value for the students using the Student Update screen
- Run the Missing Placement reports
- Validate the student and teacher schedules
- Use the Student Update screen and Non-Public Student Update screen to enter Special Education data like disability, transition services, IEP date, LEP date, teacher SSN, related services, and SCD.

MIS Responsibilities
- Ensure that the student count is being updated

  Student Count Information
  - Student count (EMPLOYEE_PERIODS.STUDENTS) for a teacher is updated by P_RECALC_STUDENT_COUNT and P_RECALC_STUD_CNT_BYDIST procedure by running the P_SPED_STU_CNT_LIVE procedure from inside the P_SPED_LRE_LIVE_DIST procedure
    - P_RECALC_STUDENT_COUNT and P_RECALC_STUD_CNT_BYDIST is the same code but one the first one is for the entire state and the second one is by district
  - Special Ed Student Count (EMPLOYEE_PERIODS.SPED_STUDENT_COUNT) is updated when the Minimum Program Package is run
    ** procedure can crash if District Minutes are greater than 990 minutes **
  - Spec Ed Student December Count on Employee Periods (EMPLOYEE_PERIODS. SPED_STU_DEC_CNT) by running the P_SPED_STU_CNT_LIVE procedure from inside the P_SPED_LRE_LIVE_DIST procedure
- Ensure that the LRE procedures are running with the district approval process

  LRE Information
  - P_SPED_LRE_LIVE_DIST procedure runs with District Approvals each month and

updates the LIVE tables
  - Student count (EMPLOYEE_PERIODS.STUDENTS) for a teacher is updated by P_RECALC_STUDENT_COUNT procedure
  - Spec Ed Student December Count on Employee Periods (EMPLOYEE_PERIODS. SPED_STU_DEC_CNT) by running the P_SPED_STU_CNT_LIVE procedure from inside the P_SPED_LRE_LIVE_DIST procedure
  - LRE Percentage (PA_CLASSES.SPED_LRE_REG_PCT)
- MSIS Calculated Placement Code (SPED_STUDENT_PLACEMENT.PLACEMENT_CODE)

November

- Table 2 is due
- Table 4 is due
- Table 5 is due
- Table 7 is due

On Cut-off date (usually December 1)

MIS Responsibilities
- Only process DSD files on Cut-off day
- Hold Month 3 District Approvals until after snapshot is taken
- Take a snapshot of the DEC01 tables
- Populate the DEC01 tables for the school year
- Must allow the Special Education role access to verify the data before opening the MSIS system back up to the users

December – January Personnel snapshot

MSIS Users
- Run the Missing Placement reports
- Validate student and teacher schedules
- Enter the User Entered Placement value for the students using the Student Update screen (updates LIVE tables)
  - This allows the users to update the Placement that did not get entered before the Dec 1 Cut-off but if they enter it on the Student Update screen, then when the Personnel snapshot is taken and the LRE procedure is rerun, the code will pull the data from the LIVE table into the Archive tables.

MIS Responsibilities
- Follow normal Count Date steps in email sent by Special Education
- Run the P_RECALC_STUDENT_COUNT procedure on request as the employee schedules are updated by the schools
- Run the P_FILL_FED_SPED_STUDENT_DATA procedure on request which populates the FED_SPED_STUDENT_DATA table for that school year

Special Education Responsibilities

- Use the Post Cut-off Student Update screen and Post Cut-off Non-Public Student Update screen to enter data for the students like Teacher SSN
    - Post Cut-off Screens only use the DECSP tables
- Run Missing Placement reports and SQL. Follow- up with districts on data that is missing
- Run Table reports and attempt to reconcile them
- Process University Based student file
- Work on Ed Facts data

January after Personnel snapshot

MIS Responsibilities

- Run the P_SPED_LRE_LIVE_CALL1_ARCHIVE – CALL10 procedures which execute the P_SPED_LRE_MAIN_LIVE_ARCHIVE procedure.
    - The P_Sped_Stu_Cnt_Live_Archive procedure is execute from within the CALL procedures and calculates the Special Ed Student count (ARCHIVE_EMPLOYEE_PERIODS.SPED_STU_DEC_CNT)
- Run the Arch_P_Fill_Fed_Sped_Student procedure
    - Updates the Race, Gender, and LEP in the FED_SPED_STUDENT_DATA table with the values from the LIVE tables if these are missing in the snapshot
        - If the calculated placement value is 99, it replaces the edu_placement with the user entered value if it exists
        - If the LEP indicator is null in the fed_sped_student_data table, pull the latest LEP value from the pa_student_indicators table, if it exists
        - P_UPDATE_SPED_RCEGENDER procedure is run at the end of the Arch_P_Fill_Fed_Sped_Student procedure

Special Education Responsibilities

- Run Table reports and attempt to reconcile them
- Work on Ed Facts file
- District Data profiles
- Run Ranking report
- Indicator 15 – District Monitoring is due in January
- SPP/APR is due February 1 for the previous year. Begin running these so the schools can make changes in the spring.

February

- SPP/APR is due February 1 for the previous year
- Table 1 is due
- Table 3 is due
- Table 6 is due

April

- Post Secondary data is due in April for the previous school year

May – June

- Districts start to roll their Personnel data as soon as Month 9 is completed
- Special Education Student data is rolled once the new school year starts in July

Mississippi Student Information System (MSIS)

Amendment to Batch Processes Document v2.0

This document replaces sections 3.19, 3.20, 3.21, 3.22, and 3.23 of original document and adds new section 3.36, 3.37, 3.38, 3.39, 3.40, and 3.41.

March 20, 2009

Prepared for:

Mississippi Department of Education

Prepared By:

Ciber, Inc.
3900 Lakeland Drive Suite 502C
Jackson, MS 39232

Export Special Ed – Table 1 Data

The process to export the Special Ed – Table 1 Data is run manually when the data is requested. There are 4 sections for Table 1 and each section has a set of SQL. These statements can be run to produce these results and generate a comma separated value file or saved as an Excel spreadsheet if using the TOAD application. All of the Table SQL code must be run after the P_Fill_FED_SPED_STUDENT_DATA procedure has been executed since the Table code uses the data in the FED_SPED_STUDENT_DATA table. State, District, and School Level queries are separated and noted by comments in the SQL files.

Section B - The SQL is stored in the **Table1SectionB.sql** file. There are 3 sets of code in this file: 1) State Level data, 2) District Level data, and 3) School Level data.

Section C - The SQL is stored in the **Table1SectionC.sql** file. There are 3 sets of code in this file: 1) State Level data, 2) District Level data, and 3) School Level data.

Section D - The SQL is stored in the **Table1SectionD.sql** file. There are 3 sets of code in this file: 1) State Level data, 2) District Level data, and 3) School Level data.

Section E - The SQL is stored in the **Table1SectionE.sql** file. There are 3 sets of code in this file: 1) State Level data, 2) District Level data, and 3) School Level data.

Export Special Ed – Table 2 Data

The process to export the Special Ed – Table 2 Data is run manually when the data is requested. There are 3 sections for Table 2 and each section has a set of SQL. These statements can be run to produce these results and generate a comma separated value file. All of the Table SQL code must be run after the P_Fill_FED_SPED_STUDENT_DATA procedure has been execute since the Table code uses the data in the FED_SPED_STUDENT_DATA table.

Section A – Execute the procedure **P_EXPORT_TABLE2A.** The procedure will create an export file named EXPORT_SPED_TBL2A.txt in the **/u02/local/msis_out/** directory. The parameter used for the SQL is P_SCHOOL_YEAR – start year of the specified schoolyear.

Section B - Execute the procedure **P_EXPORT_TABLE2B.** The procedure will create an export file named EXPORT_SPED_TBL2B.txt in the **/u02/local/msis_out/** directory. The parameter used for the SQL is P_SCHOOL_YEAR – start year of the specified schoolyear.

Section C - Execute the procedure **P_EXPORT_TABLE2C.** The procedure will create an export file named EXPORT_SPED_TBL2C.txt in the **/u02/local/msis_out/** directory. The parameter used for the SQL is P_SCHOOL_YEAR – start year of the specified schoolyear.

Export Special Ed – Table 3 Data

The process to export the Special Ed – Table 3 Data is run manually when the data is requested. There are 9 sections for Table 3 and each section has a set of SQL. These statements can be run to produce these results and generate a comma separated value file or saved as an Excel spreadsheet if using the TOAD application. All of the Table SQL code must be run after the P_Fill_FED_SPED_STUDENT_DATA procedure has been execute since the Table code uses the data in the FED_SPED_STUDENT_DATA table. State, District, and School Level queries are separated and noted by comments in the SQL files.

Section A - The SQL is stored in the **Table3SectionA.sql** file. There are 3 sets of code in this file: 1) State Level data; 2) District Level data; and 3) School Level data.

Section B - The SQL is stored in the **Table3SectionB.sql** file. There are 3 sets of code in this file: 1) State Level data; 2) District Level data; and 3) School Level data.

Section C - The SQL is stored in the **Table3SectionC.sql** file. There are 3 sets of code in this file: 1) State Level data; 2) District Level data; and 3) School Level data.
Section D - The SQL is stored in the **Table3SectionD.sql** file. There are 3 sets of code in this file: 1) State Level data; 2) District Level data; and 3) School Level data.
Section E - The SQL is stored in the **Table3SectionE.sql** file. There are 3 sets of code in this file: 1) State Level data; 2) District Level data; and 3) School Level data.
Section F - The SQL is stored in the **Table3SectionF.sql** file. There are 3 sets of code in this file: 1) State Level data; 2) District Level data; and 3) School Level data.
Section G - The SQL is stored in the **Table3SectionG.sql** file. There are 3 sets of code in this file: 1) State Level data; 2) District Level data; and 3) School Level data.
Section H - The SQL is stored in the **Table3SectionH.sql** file. There are 3 sets of code in this file: 1) State Level data; 2) District Level data; and 3) School Level data.
Section I - The SQL is stored in the **Table3SectionI.sql** file. There are 3 sets of code in this file: 1) State Level data; 2) District Level data; and 3) School Level data.
***Note – The following queries can be used to verify and correct data in the fed_sped_student_data table before running the Table queries. Placement values listed should be checked to ensure they are a current, active, and complete list of placement codes.*

Students who are missing race	SELECT * FROM FED_SPED_STUDENT_DATA WHERE RACE IS NULL AND AGE >= 3 AND YEAR = :SCHOOL_YEAR
Students who are missing gender	SELECT * FROM FED_SPED_STUDENT_DATA WHERE GENDER IS NULL AND AGE >= 3 AND YEAR = :SCHOOL_YEAR
Students who have incorrect or missing placement (3 – 5 year olds)	SELECT * FROM FED_SPED_STUDENT_DATA WHERE AGE >= 3 AND AGE <= 5 AND (EDU_PLACEMENT NOT IN (‘PA’,’PB’,’PC’,’PD’,’PE’,’PF’,’PG’,’PH’) OR EDU_PLACEMENT IS NULL) AND YEAR = :SCHOOL_YEAR
Students who have incorrect or missing placement (6 – 21 year olds)	SELECT * FROM FED_SPED_STUDENT_DATA WHERE AGE >= 6 AND AGE <= 21 AND (EDU_PLACEMENT NOT IN (‘SA’,’SB’,’SC’,’SD’,’SE’,’SF’,’SG’,’SH’,’SI’,’SJ’) OR EDU_PLACEMENT IS NULL) AND YEAR = :SCHOOL_YEAR
Students who are missing LEP Indicator	SELECT * FROM FED_SPED_STUDENT_DATA WHERE LEPIND IS NULL AND AGE >= 3

	AND YEAR = :SCHOOL_YEAR

Export Special Ed – Table 4 Data

The process to export the Special Ed – Table 4 Data is run manually when the data is requested. There are 7 sections for Table 4 and each section has a separate procedure. These statements can be run to produce these results and generate a comma separated value file. All of the Table SQL code must be run after the P_Fill_FED_SPED_STUDENT_DATA procedure has been execute since the Table code uses the data in the FED_SPED_STUDENT_DATA table. * Note: The sections A2 and C2 contain a breakdown of row C from section A and C respectively.

Section A – Execute the procedure **P_EXPORT_TABLE4A.** The procedure will create an export file named EXPORT_SPED_TBL4A.csv in the **/u02/local/msis_out/** directory. The parameter used for the SQL is P_SCHOOL_YEAR – start year of the specified schoolyear.

Execute the procedure **P_EXPORT_TABLE4A_DIST** to run Table 4 Section A by District. The procedure will create an export file named EXPORT_SPED_TBL4A_DIST.csv in the **/u02/local/msis_out/** directory. The parameter used for the SQL is P_SCHOOL_YEAR – start year of the specified schoolyear.

Execute the procedure **P_EXPORT_TABLE4A_SCHOOL** to run Table 4 Section A by School. The procedure will create an export file named EXPORT_SPED_TBL4A_SCHOOL.csv in the **/u02/local/msis_out/** directory. The parameter used for the SQL is P_SCHOOL_YEAR – start year of the specified schoolyear.

Section A2 - Execute the procedure **P_EXPORT_TABLE4A2.** The procedure will create an export file named EXPORT_SPED_TBL4A2.csv in the **/u02/local/msis_out/** directory. The parameter used for the SQL is P_SCHOOL_YEAR – start year of the specified schoolyear.

Execute the procedure **P_EXPORT_TABLE4A2_DIST** to run Table 4 Section A2 by District. The procedure will create an export file named EXPORT_SPED_TBL4A2_DIST.csv in the **/u02/local/msis_out/** directory. The parameter used for the SQL is P_SCHOOL_YEAR – start year of the specified schoolyear.

Execute the procedure **P_EXPORT_TABLE4A2_SCHOOL** to run Table 4 Section A2 by School. The procedure will create an export file named EXPORT_SPED_TBL4A2_SCHOOL.csv in the **/u02/local/msis_out/** directory. The parameter used for the SQL is P_SCHOOL_YEAR – start year of the specified schoolyear.

Section B - Execute the procedure **P_EXPORT_TABLE4B.** The procedure will create an export file named EXPORT_SPED_TBL4B.csv in the **/u02/local/msis_out/** directory. The parameter used for the SQL is P_SCHOOL_YEAR – start year of the specified schoolyear.

Execute the procedure **P_EXPORT_TABLE4B_DIST** to run Table 4 Section B by District. The procedure will create an export file named EXPORT_SPED_TBL4B_DIST.csv in the **/u02/local/msis_out/** directory. The parameter used for the SQL is P_SCHOOL_YEAR – start year of the specified schoolyear.

Execute the procedure **P_EXPORT_TABLE4B_SCHOOL** to run Table 4 Section B by School. The procedure will create an export file named EXPORT_SPED_TBL4B_SCHOOL.csv in the **/u02/local/msis_out/** directory. The parameter used for the SQL is P_SCHOOL_YEAR – start year of the specified schoolyear.

Section C - Execute the procedure **P_EXPORT_TABLE4C.** The procedure will create an export file named EXPORT_SPED_TBL4C.csv in the **/u02/local/msis_out/** directory. The parameter used for the SQL is P_SCHOOL_YEAR – start year of the specified schoolyear.

Execute the procedure **P_EXPORT_TABLE4C_DIST** to run Table 4 Section C by District. The procedure will create an export file named EXPORT_SPED_TBL4C_DIST.csv in the **/u02/local/msis_out/** directory. The parameter used for the SQL is P_SCHOOL_YEAR – start year of the specified schoolyear.
Execute the procedure **P_EXPORT_TABLE4C_SCHOOL** to run Table 4 Section C by School. The procedure will create an export file named EXPORT_SPED_TBL4C_SCHOOL.csv in the **/u02/local/msis_out/** directory. The parameter used for the SQL is P_SCHOOL_YEAR – start year of the specified schoolyear.
Section C2 - Execute the procedure **P_EXPORT_TABLE4C2.** The procedure will create an export file named EXPORT_SPED_TBL4C2.csv in the **/u02/local/msis_out/** directory. The parameter used for the SQL is P_SCHOOL_YEAR – start year of the specified schoolyear.
Execute the procedure **P_EXPORT_TABLE4C2_DIST** to run Table 4 Section C2 by District. The procedure will create an export file named EXPORT_SPED_TBL4C2_DIST.csv in the **/u02/local/msis_out/** directory. The parameter used for the SQL is P_SCHOOL_YEAR – start year of the specified schoolyear.
Execute the procedure **P_EXPORT_TABLE4C2_SCHOOL** to run Table 4 Section C2 by School. The procedure will create an export file named EXPORT_SPED_TBL4C2_SCHOOL.csv in the **/u02/local/msis_out/** directory. The parameter used for the SQL is P_SCHOOL_YEAR – start year of the specified schoolyear.
Section D - Execute the procedure **P_EXPORT_TABLE4D.** The procedure will create an export file named EXPORT_SPED_TBL4D.csv in the **/u02/local/msis_out/** directory. The parameter used for the SQL is P_SCHOOL_YEAR – start year of the specified schoolyear.
Execute the procedure **P_EXPORT_TABLE4D_DIST** to run Table 4 Section D by District. The procedure will create an export file named EXPORT_SPED_TBL4D_DIST.csv in the **/u02/local/msis_out/** directory. The parameter used for the SQL is P_SCHOOL_YEAR – start year of the specified schoolyear.
Execute the procedure **P_EXPORT_TABLE4D_SCHOOL** to run Table 4 Section D by School. The procedure will create an export file named EXPORT_SPED_TBL4D_SCHOOL.csv in the **/u02/local/msis_out/** directory. The parameter used for the SQL is P_SCHOOL_YEAR – start year of the specified schoolyear.
Section E - Execute the procedure **P_EXPORT_TABLE4E.** The procedure will create an export file named EXPORT_SPED_TBL4E.csv in the **/u02/local/msis_out/** directory. The parameter used for the SQL is P_SCHOOL_YEAR – start year of the specified schoolyear.
Execute the procedure **P_EXPORT_TABLE4E_DIST** to run Table 4 Section E by District. The procedure will create an export file named EXPORT_SPED_TBL4E_DIST.csv in the **/u02/local/msis_out/** directory. The parameter used for the SQL is P_SCHOOL_YEAR – start year of the specified schoolyear.
Execute the procedure **P_EXPORT_TABLE4E_SCHOOL** to run Table 4 Section E by School. The procedure will create an export file named EXPORT_SPED_TBL4E_SCHOOL.csv in the **/u02/local/msis_out/** directory. The parameter used for the SQL is P_SCHOOL_YEAR – start year of the specified schoolyear.

Export Special Ed – Table 5 Data

The process to export the Special Ed – Table 5 Data is run manually when the data is requested. There are 5 sections for Table 5 and each section has a separate procedure. These statements can be run to produce these results and generate a comma separated value file. All of the Table SQL

code must be run after the P_Fill_FED_SPED_STUDENT_DATA procedure has been execute since the Table code uses the data in the FED_SPED_STUDENT_DATA table.

Section A - Execute the procedure **P_EXPORT_TABLE5A.** The procedure will create an export file named EXPORT_SPED_TBL5A.csv in the **/u02/local/msis_out/** directory. The parameter used for the SQL is P_SCHOOL_YEAR – start year of the specified schoolyear.

Execute the procedure **P_EXPORT_TABLE5A_DIST** to run Table 5 Section A by District. The procedure will create an export file named EXPORT_SPED_TBL5A_DIST.csv in the **/u02/local/msis_out/** directory. The parameter used for the SQL is P_SCHOOL_YEAR – start year of the specified schoolyear.

Execute the procedure **P_EXPORT_TABLE5A_SCHOOL** to run Table 5 Section A by School. The procedure will create an export file named EXPORT_SPED_TBL5A_SCHOOL.csv in the **/u02/local/msis_out/** directory. The parameter used for the SQL is P_SCHOOL_YEAR – start year of the specified schoolyear.

Section B - Execute the procedure **P_EXPORT_TABLE5B.** The procedure will create an export file named EXPORT_SPED_TBL5B.csv in the **/u02/local/msis_out/** directory. The parameter used for the SQL is P_SCHOOL_YEAR – start year of the specified schoolyear.

Execute the procedure **P_EXPORT_TABLE5B_DIST** to run Table 5 Section B by District. The procedure will create an export file named EXPORT_SPED_TBL5B_DIST.csv in the **/u02/local/msis_out/** directory. The parameter used for the SQL is P_SCHOOL_YEAR – start year of the specified schoolyear.

Execute the procedure **P_EXPORT_TABLE5B_SCHOOL** to run Table 5 Section B by School. The procedure will create an export file named EXPORT_SPED_TBL5B_SCHOOL.csv in the **/u02/local/msis_out/** directory. The parameter used for the SQL is P_SCHOOL_YEAR – start year of the specified schoolyear.

Section C - Execute the procedure **P_EXPORT_TABLE5C.** The procedure will create an export file named EXPORT_SPED_TBL5C.csv in the **/u02/local/msis_out/** directory. The parameter used for the SQL is P_SCHOOL_YEAR – start year of the specified schoolyear.

Execute the procedure **P_EXPORT_TABLE5C_DIST** to run Table 5 Section C by District. The procedure will create an export file named EXPORT_SPED_TBL5C_DIST.csv in the **/u02/local/msis_out/** directory. The parameter used for the SQL is P_SCHOOL_YEAR – start year of the specified schoolyear.

Execute the procedure **P_EXPORT_TABLE5C_SCHOOL** to run Table 5 Section C by School. The procedure will create an export file named EXPORT_SPED_TBL5C_SCHOOL.csv in the **/u02/local/msis_out/** directory. The parameter used for the SQL is P_SCHOOL_YEAR – start year of the specified schoolyear.

Section D - Execute the procedure **P_EXPORT_TABLE5D.** The procedure will create an export file named EXPORT_SPED_TBL5D.csv in the **/u02/local/msis_out/** directory. The parameter used for the SQL is P_SCHOOL_YEAR – start year of the specified schoolyear.

Execute the procedure **P_EXPORT_TABLE5D_DIST** to run Table 5 Section D by District. The procedure will create an export file named EXPORT_SPED_TBL5D_DIST.csv in the **/u02/local/msis_out/** directory. The parameter used for the SQL is P_SCHOOL_YEAR – start year of the specified schoolyear.

Execute the procedure **P_EXPORT_TABLE5D_SCHOOL** to run Table 5 Section D by School. The procedure will create an export file named EXPORT_SPED_TBL5D_SCHOOL.csv in the **/u02/local/msis_out/** directory. The parameter used for the SQL is P_SCHOOL_YEAR – start

year of the specified schoolyear.
Section E - Execute the procedure **P_EXPORT_TABLE5E.** The procedure will create an export file named EXPORT_SPED_TBL5E.csv in the **/u02/local/msis_out/** directory. The parameter used for the SQL is P_SCHOOL_YEAR – start year of the specified schoolyear.
Execute the procedure **P_EXPORT_TABLE5E_DIST** to run Table 5 Section E by District. The procedure will create an export file named EXPORT_SPED_TBL5E_DIST.csv in the **/u02/local/msis_out/** directory. The parameter used for the SQL is P_SCHOOL_YEAR – start year of the specified schoolyear.
Execute the procedure **P_EXPORT_TABLE5E_SCHOOL** to run Table 5 Section E by School. The procedure will create an export file named EXPORT_SPED_TBL5E_SCHOOL.csv in the **/u02/local/msis_out/** directory. The parameter used for the SQL is P_SCHOOL_YEAR – start year of the specified schoolyear.

…

Import University Based Student Data

The process to import University Based student data to the MSIS database is run manually. The data to be imported will be provided from outside sources and formatted by MDE staff in a comma-delimited file named "ubsubdata.txt". The process will send an email to MDE personnel containing the results of the import and any errors.

Please follow the instructions below for loading the University based data to the database:

Delete the files ubext.bad and ebext.log from the /u02/local/SPED_DIR folder - The .bad file will not be overwritten if no errors exist (need to clear old data). The log file will be appended on every run unless it is deleted – this is not necessary, but will make it easier to read and take less space on the server.

The file should be in CSV format (from excel) but with the name "ubsubdata.txt". Save as csv and then renaming will keep the csv format.
This file is used by the "UB_PLACEMENTS_SUB" table for external data.

Ftp the "ubsubdata.txt" file to /u02/local/SPED_DIR folder.

After that execute the procedure "proc_to_call_ub_csv_ld.txt"
Set the year value before running the procedure.

*/*Contents of proc_to_call_ub_csv_ld.txt */*
*/**

Created By Sankar Ramalingam
Before running this procedure ftp the university based csv file to SPED_DIR folder with the name ubsubdata.txt

```
Set the year corresponds to the file / current year.

*/
SET SERVEROUTPUT ON SIZE 1000000
CALL DBMS_JAVA.SET_OUTPUT(1000000);
DECLARE
  P_YEAR NUMBER;
BEGIN
  P_YEAR := 2006;


--initlog.sh file appends the log files to a backup files for history.
  host_command('/u02/local/SPED_DIR/initlog.sh');


  P_INS_FED_SPED_DATA_CSV2(P_YEAR => P_YEAR);

--Following shell scripts emails the log files created during the above procedure and the
contents of ub_error_log table.
  host_command('/u02/local/SPED_DIR/mail_log.sh');
  host_command('/u02/local/SPED_DIR/chk_err_log.sh');

END;
```

Export Special Ed – Intervention Analysis

The Intervention Analysis report is a CSV file with calculated statistics based mostly on the intervention data in MSIS. The process to export the Special Ed – Intervention Analysis is run manually when the data is requested. There is one procedure that can be run to produce these results and generate a comma separated value file. The procedure may be executed at a school, district, or statewide level. There is a script located on the production database server named 'run_P_SPED_INTERVENTION_ANALYSIS.sh' that can be used to execute the following steps.

To generate a Statewide Report:

Execute the procedure **P_SPED_INTERVENTION_ANALYSIS (*P_SCHOOL_YEAR*, 'STATE').** The procedure will create an export file named EXPORT_SPED_INTERVENTION.csv in the **/u02/local/msis_out/** directory. The parameter used for the SQL is P_SCHOOL_YEAR – start year of the specified schoolyear.

To generate a District Report:

Execute the procedure **P_SPED_INTERVENTION_ANALYSIS (*P_SCHOOL_YEAR*, *'DISTRICT'*).** The procedure will create an export file named EXPORT_SPED_INTERVENTION_DISTRICT.csv in the **/u02/local/msis_out/** directory. The parameter used for the SQL is P_SCHOOL_YEAR – start year of the specified schoolyear.

To generate a School Report:

Execute the procedure **P_SPED_INTERVENTION_ANALYSIS (*P_SCHOOL_YEAR, 'SCHOOL'*).** The procedure will create an export file named EXPORT_SPED_INTERVENTION_SCHOOL.csv in the **/u02/local/msis_out/** directory. The parameter used for the SQL is P_SCHOOL_YEAR – start year of the specified schoolyear.

Ranking Report and District Data Profile

The Ranking Report is a csv file that lists several statistics and calculations related to Special Education Data. The District Data Profile procedure populates data into a table that is used by a web-based report in the MSIS Application. The process to export the Special Education Ranking Report is run manually when the data is requested. The procedure that generates the export file also calls the procedure P_RPT_DISTRICT_DATA_PROFILE to populate the RPT_DISTRICT_DATA_PROFILE table. Reports in the MSIS web application use this table. There is a script located on the production database server named 'run_P_SPED_RANKING_REPORT.sh' that can be used to execute the following steps.

To run the ranking report:

Execute the procedure **P_SPED_RANKING_REPORT (*P_SCHOOL_YEAR*)**. The procedure will create several export files for each disability specified in the procedure in the **/u02/local/msis_out/** directory. These disabilities can be changed programmatically. The current values as of October 2008 are SLD, EMD, EMR, and OHI. The corresponding file names would be SPED_RANKING_SLD_*Year*.csv, SPED_RANKING_EMD_*Year*.csv, SPED_RANKING_EMR_*Year*.csv, and SPED_RANKING_OHI_*Year*.csv. The parameter used for the SQL is P_SCHOOL_YEAR – start year of the specified schoolyear. Each filename will be appended with this year value.

Special Ed Export – Indicator 15 Report

The Indicator 15 Report is a csv file with statistics regarding Special Education District Monitoring data. The process to export the Special Ed – Indicator 15 report is run manually when the data is requested. There is one procedure that can be run to produce these results and generate a comma separated value file. The procedure may be executed at a district or statewide level.

To generate a Statewide Report:

Execute the procedure **P_SPED_INDICATOR_15_RPT ('%', *P_SCHOOL_YEAR*).** The procedure will create an export file named SPED_INDICATOR_15_REPORT_xxxx.csv in the **/u02/local/msis_out/** directory. The parameter used for the SQL is P_SCHOOL_YEAR – start year of the specified schoolyear. The 'xxxx' in the filename will be the schoolyear specified.

To generate a District Report:

Execute the procedure **P_SPED_INDICATOR_15_RPT (*P_DISTRICT_NUMBER, P_SCHOOL_YEAR*).** The procedure will create an export file named

SPED_INDICATOR_15_REPORT_xxxx.csv in the **/u02/local/msis_out/** directory. The parameter used for the SQL is P_SCHOOL_YEAR – start year of the specified schoolyear. The 'xxxx' in the filename will be the schoolyear specified. The parameter used for the District Number is P_DISTRICT_NUMBER – the individual district you are running the report for.

Special Ed Import – MCT Test Data

MCT Test Data is used by the District Data Profile Report. Certain grade levels and subject areas are selected from a larger set of test data provided by the Office of Research and Statistics. MDE SPED Management will construct two files to import into MSIS.

- MCT_Proficient.txt – This file contains District Number, Subject, Percent with No Disabilities, and Percent with Disabilities. It is a comma-separated file.
- MCT_Participating.txt – This file contains District Number, Percent On-Level with Disabilities, Percent Out of Level with Disabilities, and Percent On-Level without Disabilities. It is a comma-separated file.

These two should be placed in the MSIS_DOWNLOAD directory and correspond to two external tables in MSIS named EXT_MCT_PCT_PROFICIENT and EXT_MCT_PCT_PARTICIPATING.
After the files have been loaded, the procedure P_SPED_IMPORT_MCT_DATA needs to run for the given schoolyear. Since new files will be loaded into the external tables each year, this procedure pulls the information into the permanent table MCT_TEST_DATA so that multiple years of data can be maintained. The District Data Profile Report uses the MCT_TEST_DATA table to display this data.

Special Ed Import – Part C to B

The Special Education department receives a monthly file from the Department of Health which contains students who transition to the responsibility of MDE on their third birthday. The Health department is responsible for uploading a file to MDE on a monthly process of the students who will be turning 3 years old within 6 months. The process to import the Special Ed – Part C to B file is run manually when the data is requested. A scheduled run is pending and this process will be automated at that point.
Steps:

Batch file process (partc2bFileProcess.bat) on the Windows NT server (172.16.10.250 - specedftp) moves the file from the C:\MDEFileUploads\ folder to the C:\Inetpub\ftproot\IN\ folder that can be accessed via FTP. This Batch file is scheduled to run Monday – Friday at 5:00 PM.

The Batch file generates a log file in the C:\MSIS_Part_C2B\ folder that documents the daily file movement, if any.

The upload application is written in .NET and resides on the MS Windows NT server in the C:\Inetpub\wwwroot\MDEFileUpload\ folder. The .NET application allows the user to login and upload a file to the C:\MDEFileUploads\ folder.
There are four scripts that reside on the MSIS Database Server in the /u02/local/sh folder:

- *ftp_poll_partc2b.sh* – This script logs in to the MS Windows NT server via ftp and gets all of the data files that have been uploaded to the server. It also kicks off the run_SPED_Grant.sh script once the file(s) are retrieved. ** This script is scheduled on the CRON to run every day at 8:00 PM.
- *run_SPED_Grant.sh* – This script executes the P_SPED_LOAD_CTOBDATA procedure on the MSIS Database which loads the file into the Part C to B table.
- *run_SPED_GrantMatch.sh* – This script executes the P_SPED_PARTC2B_MATCH procedure on the MSIS Database. It will take the students in the SPED_PART_C2B table for the specified school year and attempt to match them to a student in the PA_STUDENTS table and pull the MSIS ID and District Number to the SPED_PARTC2B_DATA table.
- *run_SPED_GrantFedMatch.sh* – This script executes the P_SPED_PARTC2B_FED procedure on the MSIS Database. It will take the students in the SPED_PART_C2B table that have a MSIS ID and attempt to match them to students in the December 01 count data.

ATTACHMENT F

INDIVIDUALIZED FAMILY SERVICE PLAN

Child's name: _____
(Include their first, middle, last name and "name called," if different)

Parent/Guardian's Name(s): _____

Sex: _____ **DOB:**_____ **Age:** _____

Address (physical): _____

Race: □ American Indian/Alaskan Native □ Black □ Asian/Pacific Islander □ Hispanic □ White

Address (mailing): _____

Phone Number(s): _____

SSN: _____ **FSIS Number:**_____

Additional contact: _____

The Early Intervention Service Coordinator for our family is _____ **. Our service coordinator's phone number** _____ **and office address is** _____ **.**

To the maximum extent appropriate, services will be provided in natural environments, including the home and community settings that are natural and normal for the child's age peers who have no disabilities. Services will be provided only in settings not identified as the natural environment when it is determined that this is the only way the desired outcomes can be satisfactorily achieved.

Date: _____ □ **Interim IFSP** □ **Initial IFSP** □ **Annual Eval. of IFSP**	**Date:** _____ □ **Initial IFSP** □ **Review** □ **6 month review** □ **Revision**
Concerns:	**Concerns:**
Priorities:	**Priorities:**
Resources:	**Resources:**

Date: _____ □ **Review** □ **6 month review** □ **Revision** □ **Transition**	**Date:** _____ □ **Review** □ **6 month review** □ **Revision** □ **Transition**
Concerns:	**Concerns:**
Priorities:	**Priorities:**

Resources:	**Resources:**

Evaluation Summary for _____ Record child's name:(first, middle, last)

Date of Evaluation: _____ **Child's Birth Date**: _____
Child's Chronological Age: _____ **(months)**
Corrected Age: _____ **(months)** *(Adjust chronological age for prematurity for any child 24 months or younger.)*
Functional Vision Screening: ___ **Passed** ___ **Not passed**
Functional Hearing Screening: ___ **Passed** ___ **Not passed**

Health and Medical Information (Include all pertinent information regarding birth history, past/present medical status, vision, and hearing):

Areas Assessed	Developmental Age		% Delay	Strengths	
Physical				**Gross Motor**	**Fine Motor**
(*How my child moves*)	**Gross Motor:**	____ **months**	____ **%**	**1.** _____	**1.** _____
	Fine Motor:	____ **months**	____ **%**	**2.** _____	**2.** _____
Indicate Evaluation Measures:				**3.**	**3.**
Adaptive		____ **months**	____ **%**	**1.** _____	
(How my child uses what he/she knows to get things done)				**2.** _____	
Indicate Evaluation Measures:				**3.**	
Social		____ **months**	____ **%**	**1.** _____	
(How my child plays with others)				**2.** _____	
Indicate Evaluation Measures:				**3.**	
Cognitive		____ **months**	____ **%**	**1.** _____	
(How my child learns)				**2.** _____	
Indicate Evaluation Measures:				**3.**	
Communication				**Receptive**	**Expressive**
(How my child talks and understands)	**Receptive:**	____ **months**	____ **%**	**1.** _____	**1.** _____
	Expressive:	____ **months**	____ **%**	**2.** _____	**2.** _____
Indicate Evaluation Measures:				**3.**	**3.**

Clinical Opinion/Recommendations/Comments: The _____ was used to determine percentage of delay. All results ___do ___do not support the findings. The following recommendations are based on informed clinical opinion:

Signatures	Role	Agency	Date

Evaluation Summary for _____ Record child's name:(first, middle, last)

Parent(s):			
Service Coordinator:			
Evaluator(s):			

□ **Eligible for early intervention services** (*Develop an IFSP and attach this form as page 2 of the IFSP.*) □ **Not eligible for early intervention services**

Child's name: _____ **FSIS #:** _____

Outcome # ___

Use a separate page for each outcome. Use a copy of this form when a new outcome is developed.

What is the priority this outcome will address?

What is happening now?

What do we want for our child (Annual Outcome in measurable terms)?

List the daily routines, strategies, and developmental activities needed to meet this outcome:

Setting Location: □ **Home** □ **Community** □ **Other (specify where)** _____

_____

Child's name: _____ FSIS #: _____

Outcome # ___

Use a separate page for each outcome. Use a copy of this form when a new outcome is developed.

If the setting is "other," complete and attach to this IFSP (behind this page) the "Natural Setting" form.

Child's name: _____ **FSIS #:** _____

Is it a Natural Setting?

This document is required for all services outside the NE. An NE document must be completed for every service provider who delivers services outside the NE. After responding to all of the statements, determine whether the team has identified a natural setting for services or a setting outside NE that is/is not child outcome-based. For services outside the NE, complete page 2.

In the data base type each statement on both pages as your team responded. This is your justification for settings outside the NE.

NE	Outcome-based	For each applicable Guiding Statement, circle the word(s) that reflects the team's decision. Circle the word(s) in the sentence and in the column.	Other
is		1) This **is / is not** a place where the child and family spent their time before becoming eligible for EI services.	**is not**
is not		2) The main reason the family will go to this setting **is / is not** to get EI services.	**is**
would		3) The child and family **would / would not** spend time here if the child did not have a disability.	**would not**
do		4) Typically developing peers **do / do not** spend time in this setting on a **regular** basis engaging in developmentally appropriate activities.	**do not**
		5). Was this clinical setting chosen primarily because this is the **only** place where this provider is available?	**yes**
	yes	7) Can the targeted outcome be achieved ***ONLY*** outside an inclusive, home or community setting?	
	yes	8) Are specialized equipment/procedures that are not "portable" required to achieve this outcome?	
are not		9) The services **are / are not** "pull out" services.	**are**
Is		10) The team determined that the setting **is / is not** a natural setting.	**is not** **(use p. 2)**
	is	11) The justification **is / is not** child outcome-based.	**is not**

Child's name: _____ FSIS #: _____

Natural Environment Attachment for Outcome # ___

"Although Part C recognizes the importance of, and requires, parent involvement throughout the IFSP process, Part C does not relieve the State lead agency of its responsibility to ensure that other regulatory and statutory requirements, <u>including the NE provisions</u>, are met. While the family provides significant input regarding the provision of appropriate early intervention services, ultimate responsibility for determining what services are appropriate for a particular infant or toddler, <u>including the location of such services</u>, rests with the IFSP team."

Child's name: _____ **FSIS #:** _____

Attachment F:
Natural Environment Attachment for Outcome # ___

Check all that apply. Fill in the blanks where needed.

___ The team has documented that a **design program** is warranted because:

___ of the intensive amount of time required to address the outcome (hours per day/week = _____).

___ structure within a program is needed to meet the outcomes.

___ the outcome could not be achieved within the family's routines alone.

___ other: _____

___ The IFSP team considered a continuum of placements *(e.g. library, grocery store, park, church, home, relative's home, neighbor's home, day care setting, early childhood program)*. The following settings were considered *(list all):* _____

_____.

They were rejected because: _____.

___ This is a temporary situation. There is a plan to transition from this restrictive setting to an inclusive setting. The plan is:

_____

Timeframe: _____ Supports: _____

_____ Person(s) Responsible: _____

___ The family will be involved in the activities, and family routines will be incorporated in this restrictive setting. The family routines will be incorporated *(how, where, when, with whom)* _____

_____

In order for this service to be provided in the Natural Environment *(the following needs to happen)*

_____

_____

Child's name: _____ **FSIS #:** _____

___ The family was already getting some services prior to enrolling in EI. The team offered similar services in the Natural Environment. The parent declined the EI service offered. *(See the Declining Service form.)* The service preferred by the family outside the NE will be listed under "Resources" and/or "Current service providers available to meet your child's needs," and will not be considered an EI service.

Attachment F:

Family Outcomes

Child's name: _____ **FSIS #:** _____

The outcomes address the family's unique needs.

We will know and exercise our Family Rights and advocate for _____.			
Action:		Update:	
Person(s) Responsible:	Date Discussed:	Person(s) Responsible:	Date Discussed:

We will increase our understanding of _____'s strengths, abilities, and special needs.			
Action:		Update:	
Person(s) Responsible:	Date Discussed:	Person(s) Responsible:	Date Discussed:

We will help _____develop and learn.			
Action:		Update	
Person(s) Responsible:	Date Discussed:	Person(s) Responsible:	Date Discussed:
Action:		Update	
Person(s) Responsible:	Date Discussed:	Person(s) Responsible:	Date Discussed:

We will develop and maintain support systems (including accessing resources in the community).			
Action:		Update	
Person(s) Responsible:	Date Discussed:	Person(s) Responsible:	Date Discussed:
Action		Update	
Person(s) Responsible:	Date Discussed:	Person(s) Responsible:	Date Discussed:

Child's name: _____ **FSIS #:** _____

Other Action:		Update:	
Person(s) Responsible:	Date Discussed:	Person(s) Responsible:	Date Discussed:

Child's name: _____ **FSIS #:** _____

Transition Plan

Action:		
Person(s) Responsible:	**Date Discussed:**	**Date Completed:**

Action:		
Person(s) Responsible:	**Date Discussed:**	**Date Completed:**

Action:		
Person(s) Responsible:	**Date Discussed:**	**Date Completed:**

Action:		
Person(s) Responsible:	**Date Discussed:**	**Date Completed:**

Action:		
Person(s) Responsible:	**Date Discussed:**	**Date Completed:**

Action:		
Person(s) Responsible:	**Date Discussed:**	**Date Completed:**

Examples of Transition Actions:

- Explain the different options and programs possibly available at transition.
- Parent/guardian decides where to send copies of the IFSPs and the multidisciplinary assessment information.

Child's name: _____ FSIS #: _____

Transition Plan

- Parents must invite service coordinators and service providers if they want them to attend the initial IEP meeting.
- With permission of the parents, plan the transition conference.

Attachment F:

Child's name: _____ **FSIS #:** _____

Services/Permission/Participation

Initial IFSP Date:_____

Please list current service providers you have available to meet your child's needs.

Name/Profession	Address	Phone	Funding Source

Early Intervention Services on the current IFSP (*Date*):_____ □ **Interim IFSP** □ **Initial IFSP** □ **Review** □ **6 month review** □ **Revision** □ **Annual Evaluation of the IFSP** □ **Transition**

I, _____, give permission to the Early Intervention program to carry out only the following services in this plan. Parent/ Guardian's signature: _____ Date:_____

Type of Service	Outcome #'s	Frequency	Intensity	Anticipated Starting Date	Anticipated Ending Date	Primary Service, Service, Coach, Consultant	Location of services (home, community, other)
Service Coordinator's Name:							

IFSP Team Member Role	Signature (if present)	Date	Printed Name	Agency	A S T R V 0
* Parent/Guardian					Must be A
* Service Coordinator					Must be A

Child's name: _____ **FSIS #:** _____

Services/Permission/Participation

Initial IFSP

Date:_____

Participants in IFSP team meetings: * Must attend in person. A = attended in person; S = speaker phone; T = teleconference; R = submitted written report/recommendations; V = provided verbal information to service coordinator prior to the IFSP meeting; O= Other, Please specify. If a participant was not present but participated by another means, their name will be printed in the column for printed names.

Child's name: _____ **FSIS #:** _____

Update: Evaluations and Assessments

Assessment Updates are required 6 months after the initial and annual IFSPs and at the transition conference. An evaluation of the IFSP is required annually. Documentation will come from progress notes and tools used by the service providers to measure progress. If a formal assessment is completed, include the tools used, dates administered, the examiner(s)/provider(s), and results.

Date: _____ □ **6 month review** □ **Other Review** □ **Revision** □ **Annual Evaluation of the IFSP** □ **Transition**
Date: _____ □ **6 month review** □ **Other Review** □ **Revision** □ **Annual Evaluation of the IFSP** □ **Transition**

Child's name: _____ FSIS #: _____

Update: Evaluations and Assessments

Child's name: _____ **FSIS #:** _____

Update: Outcome # ____

Use a separate page for each outcome. Use a copy of this form for reviews and revisions of each outcome.

Describe progress made towards the Annual Outcome:

Check the box that describes the status of the annual outcome. If necessary, indicate if the outcome needs to be continued or changed.

□ **Outcome not achieved:** __ **Continue** __**Change**	□ **Outcome achieved:** __ **Continue strategies for maintenance**
□ **Outcome partially met:** __ **Continue** __**Change**	__ **Write a new outcome**
□ **Priority has changed.**	__ **Discontinue**

List changes and/or new daily routines, strategies, and developmental activities needed to meet this outcome:

Setting Location: □ **Home** □ **Community** □ **Other (specify where)** _____

_____

Child's name: _____ FSIS #: _____

Update: Outcome # ____

Use a separate page for each outcome. Use a copy of this form for reviews and revisions of each outcome.

If the setting is "other," complete and attach to this IFSP (behind this page) the "Natural Setting" form.

Child's name: _____ **FSIS #:** _____

Update: Outcome # ____

Use a separate page for each outcome. Use a copy of this form for reviews and revisions of each outcome.

The outcomes address the family's unique needs.

Other Action:			
Action:		Update:	
Person(s) Responsible:	Date Discussed:	Person(s) Responsible:	Date Discussed:

Other Action:			
Action:		Update:	
Person(s) Responsible:	Date Discussed:	Person(s) Responsible:	Date Discussed:

Other Action:			
Action:		Update	
Person(s) Responsible:	Date Discussed:	Person(s) Responsible:	Date Discussed:

Other Action:			
Action:		Update	
Person(s) Responsible:	Date Discussed:	Person(s) Responsible:	Date Discussed:

Other Action:			
Action		Update	
Person(s) Responsible:	Date Discussed:	Person(s) Responsible:	Date Discussed:

Other Action:	

Child's name: _____ **FSIS #:** _____

Update: Outcome # ____

Use a separate page for each outcome. Use a copy of this form for reviews and revisions of each outcome.

Action		Update:	
Person(s) Responsible:	Date Discussed:	Person(s) Responsible:	Date Discussed:

ATTACHMENT G
VENDOR NOTIFICATION OF INTENT TO PROPOSE

ITS invites all prospective vendors who qualify through attendance at the mandatory Vendor Conference, to offer their proposals in response to this RFP. ITS requests that Vendors mail, e-mail, or fax this form to the attention of the project contact, **Debra Spell, by 3:00 P.M. Central Time, Tuesday, November 10, 2009** indicating the Vendor's intention to either participate in this procurement project by making a subsequent proposal by the RFP due date and time.

This information is requested to allow the ITS staff to gauge prospective participation in this project and monitor receipt of the indicated proposals as the due date and time arrives.

Please note: Filing this form is voluntary. Qualified Vendors are not required to file this form in order to participate in this RFP project. ITS will still accept proposals from Qualified Vendors even if they choose not to file this information. Additionally, even though a Qualified Vendor has indicated that they may file a proposal, they are not obligated to submit a proposal.

TO: Debra Spell

ITS

301 North Lamar Street, Suite 508

Jackson, MS 39201

I intend to submit a proposal in response to the project indicated below:

Project Number: 3590

Project Title: Statewide Student Information System

_____	_____	
(Signature)	(Company Name)	
_____	_____	
(Name)	(Address)	
_____	_____	
(Title)	(Address)	
_____	_____	_____
(E-mail address)	(Phone Number)	(Fax Number)

ATTACHMENT H
SYSTEM COMPONENTS AND MDE ENVIRONMENT DIAGRAMS

Network Diagram E-rate Classifications 2010

3590 Network Design.pdf

System Component PowerPoint Presentation

ITS Printout for Board Item.ppt

Student Administrations Packages
(As of June 8, 2008)

4820 ABERDEEN SCHOOL DIST
0200 ALCORN SCHOOL DIST
0300 AMITE CO SCHOOL DIST
0400 ATTALA CO SCHOOL DIST
4821 AMORY SCHOOL DIST
5920 BALDWYN SCHOOL DISTRICT
2320 BAY ST LOUIS WAVELAND SCHOOL DIST
0612 BENOIT SCHOOL DISTRICT
4320 BROOKHAVEN SCHOOL DIST
0500 BENTON CO SCHOOL DIST
2420 BILOXI PUBLIC SCHOOL DIST
5921 BOONEVILLE SCHOOL DIST
0700 CALHOUN CO SCHOOL DIST
0800 CARROLL COUNTY SCHOOL DIST
0900 CHICKASAW CO SCHOOL DIST
1100 CLAIBORNE CO SCHOOL DIST
1420 CLARKSDALE MUNICIPAL SCHOOL DIST
1300 CLAY CO SCHOOL DIST
0614 CLEVELAND SCHOOL DIST
1400 COAHOMA COUNTY SCHOOL DISTRICT
8111 COFFEEVILLE SCHOOL DIST
4420 COLUMBUS MUNICIPAL SCHOOL DIST
1500 COPIAH CO SCHOOL DIST
0220 CORINTH SCHOOL DIST
1600 COVINGTON CO SCHOOLS
4520 CANTON PUBLIC SCHOOL DIST
1000 CHOCTAW CO SCHOOL DIST
2521 CLINTON PUBLIC SCHOOL DIST
1402 COAHOMA CO AHS
4620 COLUMBIA SCHOOL DISTRICT
1700 DESOTO CO SCHOOL DIST
6720 DREW SCHOOL DIST
2620 DURANT PUBLIC SCHOOL DIST
3111 EAST JASPER CONSOLIDATED SCH DIST
6811 EAST TALLAHATCHIE CONSOL SCH DIST
1211 ENTERPRISE SCHOOL DIST
6220 FOREST MUNICIPAL SCHOOL DIST
1800 FORREST COUNTY SCHOOL DISTRICT
1802 FORREST COUNTY AG HIGH SCHOOL
1900 FRANKLIN CO SCHOOL DIST
7620 GREENVILLE PUBLIC SCHOOLS
2220 GRENADA SCHOOL DIST
2000 GEORGE CO SCHOOL DIST
2100 GREENE COUNTY SCHOOL DISTRICT
4220 GREENWOOD PUBLIC SCHOOL DISTRICT
2421 GULFPORT SCHOOL DIST
2400 HARRISON CO SCHOOL DIST
1820 HATTIESBURG PUBLIC SCHOOL DIST
1520 HAZLEHURST CITY SCHOOL DISTRICT
2502 HINDS CO AHS
2500 HINDS CO SCHOOL DIST
4720 HOLLY SPRINGS SCHOOL DIST
2700 HUMPHREYS CO SCHOOL DIST
2300 HANCOCK CO SCHOOL DIST
7611 HOLLANDALE SCHOOL DIST
2600 HOLMES CO SCHOOL DIST
0920 HOUSTON SCHOOL DIST
2900 ITAWAMBA CO SCHOOL DIST
6721 INDIANOLA SCHOOL DIST
3200 JEFFERSON CO SCHOOL DIST
3300 JEFFERSON DAVIS CO SCHOOL DIST
3000 JACKSON CO SCHOOL DIST
2520 JACKSON PUBLIC SCHOOL DIST
3400 JONES CO SCHOOL DIST
3500 KEMPER CO SCHOOL DIST
0420 KOSCIUSKO SCHOOL DISTRICT
3420 LAUREL SCHOOL DISTRICT
3900 LAWRENCE CO SCHOOL DIST
4000 LEAKE CO SCHOOL DIST
4200 LEFLORE CO SCHOOL DIST
7612 LELAND SCHOOL DIST
4300 LINCOLN CO SCHOOL DIST
8020 LOUISVILLE MUNICIPAL SCHOOL DIST
4400 LOWNDES CO SCHOOL DIST
3600 LAFAYETTE CO SCHOOL DIST
3700 LAMAR COUNTY SCHOOL DISTRICT
3800 LAUDERDALE CO SCHOOL DIST
4100 LEE COUNTY SCHOOL DISTRICT
2422 LONG BEACH SCHOOL DIST
3711 LUMBERTON PUBLIC SCHOOL DISTRICT
4500 MADISON CO SCHOOL DIST
4700 MARSHALL CO SCHOOL DIST
5720 MCCOMB SCHOOL DISTRICT
4800 MONROE CO SCHOOL DIST
4900 MONTGOMERY CO SCHOOL DIST
0616 MOUND BAYOU PUBLIC SCHOOL
4600 MARION CO SCHOOL DIST
3820 MERIDIAN PUBLIC SCHOOL DIST
3020 MOSS POINT SEPARATE SCHOOL DIST
0130 NATCHEZ-ADAMS SCHOOL DIST
5000 NESHOBA COUNTY SCHOOL DISTRICT
5100 NEWTON COUNTY SCHOOL DISTRICT
0613 NORTH BOLIVAR SCHOOL DISTRICT
5411 NORTH PANOLA SCHOOLS
7011 NORTH TIPPAH SCHOOL DIST
5200 NOXUBEE COUNTY SCHOOL DISTRICT
4111 NETTLETON SCHOOL DIST
7320 NEW ALBANY PUBLIC SCHOOLS
5130 NEWTON MUNICIPAL SCHOOL DISTRICT
5711 NORTH PIKE SCHOOL DIST
3021 OCEAN SPRINGS SCHOOL DIST
0921 OKOLONA SEPARATE SCHOOL DIST
5300 OKTIBBEHA COUNTY SCHOOL DISTRICT
3620 OXFORD SCHOOL DISTRICT
2423 PASS CHRISTIAN PUBLIC SCHOOL DIST
6120 PEARL PUBLIC SCHOOL DIST
5500 PEARL RIVER CO SCHOOL DIST
5600 PERRY CO SCHOOL DIST
1821 PETAL SCHOOL DIST
5020 PHILADELPHIA PUBLIC SCHOOL DIST
5800 PONTOTOC CO SCHOOL DIST
5900 PRENTISS CO SCHOOL DIST
3022 PASCAGOULA SCHOOL DIST
5520 PICAYUNE SCHOOL DIST

5820 PONTOTOC CITY SCHOOLS
5530 POPLARVILLE SEPARATE SCHOOL DIST
6000 QUITMAN CO SCHOOL DIST
1212 QUITMAN SCHOOL DIST
6100 RANKIN CO SCHOOL DIST
5620 RICHTON SCHOOL DIST
6200 SCOTT CO SCHOOL DIST
0615 SHAW SCHOOL DISTRICT
6500 SMITH CO SCHOOL DIST
6312 SOUTH DELTA SCHOOL DISTRICT
6700 SUNFLOWER CO SCHOOL DIST
6920 SENATOBIA MUNICIPAL SCHOOL DIST
6400 SIMPSON CO SCHOOL DIST
5412 SOUTH PANOLA SCHOOL DISTRICT
5712 SOUTH PIKE SCHOOL DIST
7012 SOUTH TIPPAH SCHOOL DIST
5320 STARKVILLE SCHOOL DISTRICT
6600 STONE CO SCHOOL DIST
6900 TATE CO SCHOOL DIST
7200 TUNICA COUNTY SCHOOL DISTRICT
7100 TISHOMINGO CO SP MUN SCH DIST
4120 TUPELO PUBLIC SCHOOL DIST
7300 UNION CO SCHOOL DIST
5131 UNION PUBLIC SCHOOL DIST
7500 VICKSBURG WARREN SCHOOL DIST
8113 WATER VALLEY SCHOOL DISTRICT
7800 WEBSTER CO SCHOOL DIST
0611 WEST BOLIVAR SCHOOL DIST
3112 WEST JASPER CONSOLIDATED SCHOOLS
1320 WEST POINT SCHOOL DIST
6812 WEST TALLAHATCHIE SCHOOL DISTRICT
7900 WILKINSON CO SCHOOL DIST
7400 WALTHALL CO SCHOOL DIST
7700 WAYNE CO SCHOOL DIST
7613 WESTERN LINE SCHOOL DISTRICT
4920 WINONA SEPARATE SCHOOL DIST
8220 YAZOO CITY MUNICIPAL SCHOOL DIST
8200 YAZOO CO SCHOOL DIST

Mississippi School Districts Listed By County
Color Coded By School Packages
AGRICULTURAL HIGH SCHOOLS
* (Not Shown on Map)
1402 Coahoma AHS
1802 Forrest AHS
2502 Hinds AHS
Student Administrative Packages
STI - (navy)
INNOVAK - (purple)
OSCAR - (yellow)
EDGEAR-JPAMS - (aqua)
REDIKER - (maroon)
SAM - (red)
SASI - (silver)
Revised June 08, 2009

MDE SAN Documentation

08-31-2009

6130 Configuration

Hosts

1. gwcentral (1 volume)
2100-2F10 switch 1 port 4
2100-510C switch 2 port 2

2. gwdist (1 volume)
2100-9B48 switch 1 port 5
2100-114B switch 2 port 5

3. Blade_6 (2 volumes)
5006-6208 switch 2 port 4
5006-620A switch 1 port 6

4. gwss (1 volume)
2100-404A switch 1 port 3
needs a second HBA for switch 2

5. 5220-3 (25 volumes)
2100-019B switch 2 port 7
2100-77E1 switch 1 port 7

6. msisdb (14 volumes)
2100-6A81 switch 1 port 0
2100-8E80 switch 2 port 0

7. 5220-1 (13 Snapshots)
2100-3C88 switch 1 port11
2100-ACE4 switch 2 port11

6130 Volumes by Host

1. gwcentral (200GB)

gwcentral01	200GB	vdisk-3

2. gwdist (200GB)

gwdist01	200GB	vdisk-3

3. blade_6 (500GB)

deptshare01	300GB	vdisk-3
zenserver1	200GB	vdisk-2

4. gwss (50GB)

gwss01	50GB	vdisk-3

5. 5220-3 (820GB)

msisb_db_root	50GB	vdisk-3
msisb_db_root_mir	50GB	vdisk-2
msisb_db_u02	40GB	vdisk-1
msisb_db_u03	90GB	vdisk-1
msisb_db_u04	90GB	vdisk-1
msisb_db_u05	10GB	vdisk-1
msisb_db_u06	20GB	vdisk-1
msisb_db_u07	20GB	vdisk-1
msisb_db_u08	80GB	vdisk-1
msisb_db_u09	80GB	vdisk-2
msisb_db_u10	10GB	vdisk-2
msisb_db_u11	10GB	vdisk-2
msisb_db_u12	10GB	vdisk-2
msisb_db_u13	10GB	vdisk-1
nonmsisb_db_root	50GB	vdisk-1
nonmsisb_db_root_mir	50GB	vdisk-2
nonmsisb_db_u01	30GB	vdisk-1
nonmsisb_db_u02	30GB	vdisk-1
nonmsisb_db_u03	30GB	vdisk-1
nonmsisb_db_u04	10GB	vdisk-2
nonmsisb_db_u05	10GB	vdisk-2
nonmsisb_db_u06	10GB	vdisk-2
nonmsisb_db_u07	10GB	vdisk-2
nonmsisb_db_u08	10GB	vdisk-2
nonmsisb_db_u09	10GB	vdisk-2

6130 Volumes by Host continued

6. msisdb (585GB)

msisdb_u02	80GB	vdisk-1
msisdb_u03	90GB	vdisk-1
msisdb_u04	90GB	vdisk-1
msisdb_u05	10GB	vdisk-2
msisdb_u06	10GB	vdisk-2
msisdb_u07	10GB	vdisk-2
msisdb_u08	80GB	vdisk-2
msisdb_u09	80GB	vdisk-2
msisdb_u10	5GB	vdisk-2
msisdb_u10_a	10GB	vdisk-1
msisdb_u11	5GB	vdisk-2
msisdb_u12	5GB	vdisk-2
msisdb_u13	10GB	vdisk-2
msisdb_u14	100GB	vdisk-1

7. 5220-1

msisdb_u02_ss	8GB	vdisk-2
msisdb_u03_ss	24GB	vdisk-2
msisdb_u04_ss	22.5GB	vdisk-2
msisdb_u05_ss	10GB	vdisk-2
msisdb_u06_ss	1GB	vdisk-2
msisdb_u07_ss	1GB	vdisk-2
msisdb_u08_ss	8GB	vdisk-2
msisdb_u09_ss	8GB	vdisk-2
msisdb_u10_ss	5GB	vdisk-2
msisdb_u10_a_ss	5GB	vdisk-3
msisdb_u11_ss	5GB	vdisk-2
msisdb_u12_ss	512MB	vdisk-2
msisdb_u13_ss	1GB	vdisk-2

6140 Configuration

Hosts

1. 5220-1 (27 volumes)
2100-3C88 switch 1 port 11
2100-ACE4 switch 2 port 11

2. 5220-3 (0 volumes)
2100-77E1 switch 1 port 7
2100-019B switch 2 port 7

3. Blade_4 (1 volume)
5006-6200 switch 2 port 4
5006-6202 switch 1 port 6

4. Blade_8 (1 volume)
5006-6212 switch 2 port 4
5006-6210 switch 1 port 6

5. Blade_5 (2 volumes)
5006-6204 switch 2 port 4
5006-6206 switch 1 port 6

6. Blade_6 (0 volumes)
5006-6208 switch 2 port 4
5006-620A switch 1 port 6

7. Blade_2 (2 volumes)
5006-6214 switch 2 port 4
5006-6216 switch 1 port 6
8. Blade_3 (1 volume)
5006-6218 switch 2 port 4
5006-621A switch 1 port 6

6140 Volumes by Host

1. 5220-1 (1,240GB)

msisdb1_root	50GB	vdisk-2
msisdb1_root_mir	50GB	vdisk-5
msisdb1_u02	80GB	vdisk-1
msisdb1_u03	120GB	vdisk-1
msisdb1_u04	120GB	vdisk-1
msisdb1_u05	10GB	vdisk-1
msisdb1_u06	30GB	vdisk-1
msisdb1_u07	20GB	vdisk-1
msisdb1_u08	100GB	vdisk-1
msisdb1_u09	100GB	vdisk-1
msisdb1_u10	30GB	vdisk-4
msisdb1_u11	10GB	vdisk-4
msisdb1_u12	10GB	vdisk-4
msisdb1_u13	20GB	vdisk-4
msisdb1_u14	150GB	vdisk-4
nonmsisdb1_root	50GB	vdisk-2
nonmsisdb1_root_mir	40GB	vdisk-6
nonmsisdb1_u01	30GB	vdisk-4
nonmsisdb1_u02	30GB	vdisk-4
nonmsisdb1_u03	30GB	vdisk-4
nonmsisdb1_u04	10GB	vdisk-1
nonmsisdb1_u05	10GB	vdisk-1
nonmsisdb1_u06	10GB	vdisk-1
nonmsisdb1_u07	10GB	vdisk-1
nonmsisdb1_u08	10GB	vdisk-1
nonmsisdb1_u09	10GB	vdisk-1
nonmsisdb1_u10	100GB	vdisk-4

2. 5220-3 (0 GB)
volumes to be carved out soon

3. Blade_4 (200GB) *** clustered with Blade_8

gwclust_01	200GB	vdisk-5

4. Blade_8 (200GB) *** clustered with Blade_4

gwclust_01	200GB	vdisk-5

5. Blade_5 (1400GB)

uservol_1a	700GB	vdisk-2
uservol_01	700GB	vdisk-3

6140 Volumes by Host continued

6. Blade_6 (0 GB)
*** no volumes at the moment***

7. Blade_2 (1040GB) *** clustered with Blade_3

DataStorSan_1a	500GB	vdisk-6
DataStorSan_1b	540GB	vdisk-7

8. Blade_3 (1040GB) *** clustered with Blade_2

DataStorSan_1a	500GB	vdisk-6
DataStorSan_1b	540GB	vdisk-7

QLogic 5600 Switch 1 Zoning

Zones

1. gwcentral_6130

2004-00D5	6130 Controller A	port 15
2005-00D6	6130 Controller B (failover)	port 14
2100-3F10	HBA	port 4

2. gwdist_6130

2004-00D5	6130 Controller A	port 15
2005-00D6	6130 Controller B (failover)	port 14
2100-9B48	HBA	port 5

3. Blade_6_6130

2004-00D5	6130 Controller A	port 15
2005-00D6	6130 Controller B (failover)	port 14
5006-620A	Blade 6 HBA	port 6

4. gwss_6130

2004-00D5	6130 Controller A	port 15
2005-00D6	6130 Controller B (failover)	port 14
2100-404A	HBA	port 3

5. 5220-3_6130

2004-00D5	6130 Controller A	port 15
2005-00D6	6130 Controller B (failover)	port 14
2100-77E1	HBA	port 7

6. msisdb_6130

2004-00D5	6130 Controller A	port 15
2005-00D6	6130 Controller B (failover)	port 14
2100-6A81	HBA	port 0

7. 5220-1_6130

2004-00D5	6130 Controller A	port 15
2005-00D6	6130 Controller B (failover)	port 14
2100-3C88	HBA	port 11

8. 5220-1_6140

2014-8334	6140 Controller A	port 13
2100-3C88	HBA	port 11

QLogic 5600 Switch 1 Zoning continued

9. 5220-3_6140

2014-8334	6140 Controller A	port 13
2100-77E1	HBA	port 7

10. gwcentral_6140

2014-8334	6140 Controller A	port 13
2100-3F10	HBA	port 5

11. Blade_4_6140

2014-8334	6140 Controller A	port 13
5006-6202	Blade 4 HBA	port 6

12. Blade_8_6140

2014-8334	6140 Controller A	port 13
5006-6212	Blade 8 HBA	port 6

13. Blade_5_6140

2014-8334	6140 Controller A	port 13
5006-6206	Blade 5 HBA	port 6

14. Blade_6_6140

2014-8334	6140 Controller A	port 13
5006-620A	Blade 6 HBA	port 6

15. Blade_2_6140

2014-8334	6140 Controller A	port 13
5006-6216	Blade 2 HBA	port 6

16. Blade_3_6140

2014-8334	6140 Controller A	port 13
5006-621A	Blade 3 HBA	port 6

QLogic 5600 Switch 2 Zoning

Zones

1. gwcentral_6130

2004-00D6	6130 Controller A (failover)	port 15
2005-00D5	6130 Controller B	port 14
2100-510C	HBA	port 2

2. gwdist_6130

2004-00D6	6130 Controller A (failover)	port 15
2005-00D5	6130 Controller B	port 14
2100-114B	HBA	port 5

3. Blade_6_6130

2004-00D6	6130 Controller A (failover)	port 15
2005-00D5	6130 Controller B	port 14
5006-6208	Blade 6 HBA	port 4

4. 5220-3_6130

2004-00D6	6130 Controller A (failover)	port 15
2005-00D5	6130 Controller B	port 14
2100-019B	HBA	port 7

5. msisdb_6130

2004-00D6	6130 Controller A (failover)	port 15
2005-00D5	6130 Controller B	port 14
2100-8E80	HBA	port0

6. 5220-1_6130

2004-00D6	6130 Controller A (failover)	port 15
2005-00D5	6130 Controller B	port 14
2100-ACE4	HBA	port 11

7. 5220-1_6140

2015-8334	6140 Controller B	port 13
2100-ACE4	HBA	port 11

8. gwcentral_6140

2015-8334	6140 Controller B	port 13
2100-510C	HBA	port 2

9. Blade_4_6140

2015-8334	6140 Controller B	port 13

5006-6200	Blade 4 HBA	port 4

QLogic 5600 Switch 2 Zoning continued

Zones

10. Blade_8_6140

2015-8334	6140 Controller B	port 13
5006-6210	Blade 9 HBA	port 4

11. Blade_5_6140

2015-8334	6140 Controller B	port 13
5006-6204	Blade 5 HBA	port 4

12. Blade_6_6140

2015-8334	6140 Controller B	port 13
5006-6208	Blade 6 HBA	port 4

13. Blade_2_6140

2015-8334	6140 Controller B	port 13
5006-6214	Blade 2 HBA	port 4

14. Blade_3_6140

2015-8334	6140 Controller B	port 13
5006-6218	Blade 3 HBA	port 4

15. 5220-3_6140

2015-8334	6140 Controller B	port 13
2100-019B	HBA	port 7

In the following tables each switch is described on a port by port basis. Also a table is included to show what hosts that require SAN access reside on each blade of our HP 7000c series blade chassis.

Switch 1 Configuration

QLogic 5600 SANBox

Port	Host	WWN	comment
0	msisdb	2100-6A81	Production MSIS
1			
2			
3	gwss	2100-404A	Novell
4	gwcentral	2100-3F10	Novell
5	gwdist	2100-9B48	Novell
6	Blade servers	see table below	HP 7000c Series Blade Chassis
7	5220-3	2100-77E1	New Sun-Oracle Virtual Test Environment
8			
9			
10	5220-2	2100-B204	New MSIS Fail-over box
11	5220-1	2100-3C88	New MSIS Database Server
12			
13	6140 Controller A	2014-8334	StorageTek Array Controller
14	6130 Controller B	2000-00D6	StorageTek Array Controller
15	6130 Controller A	2000-00D5	StorageTek Array Controller

Blade	Host
2	ESX Server
4	gwclust
5	mdeshare
6	mdeshare
9	gwclust

Switch 2 Configuration

QLogic 5600 SANBox

Port	Host	WWN	comment
0	msisdb	2100-8E80	Production MSIS
1			
2			
3			
4	Blade servers	see table below	HP 7000c Series Blade Chassis
5	gwdist	2100-114B	Novell
6			
7	5220-3	2100-019B	New Sun-Oracle Virtual Test Environment
8			
9			
10	5220-2	2100-C9A4	New MSIS Fail-over box
11	5220-1	2100-ACE4	New MSIS Database Server
12			
13	6140 Controller A	2015-8834	StorageTek Array Controller
14	6130 Controller B	2005-00D5	StorageTek Array Controller
15	6130 Controller A	2004-00D6	StorageTek Array Controller

Blade	Host
2	ESX Server
4	gwclust
5	mdeshare
6	mdeshare
9	gwclust

MDE 6130

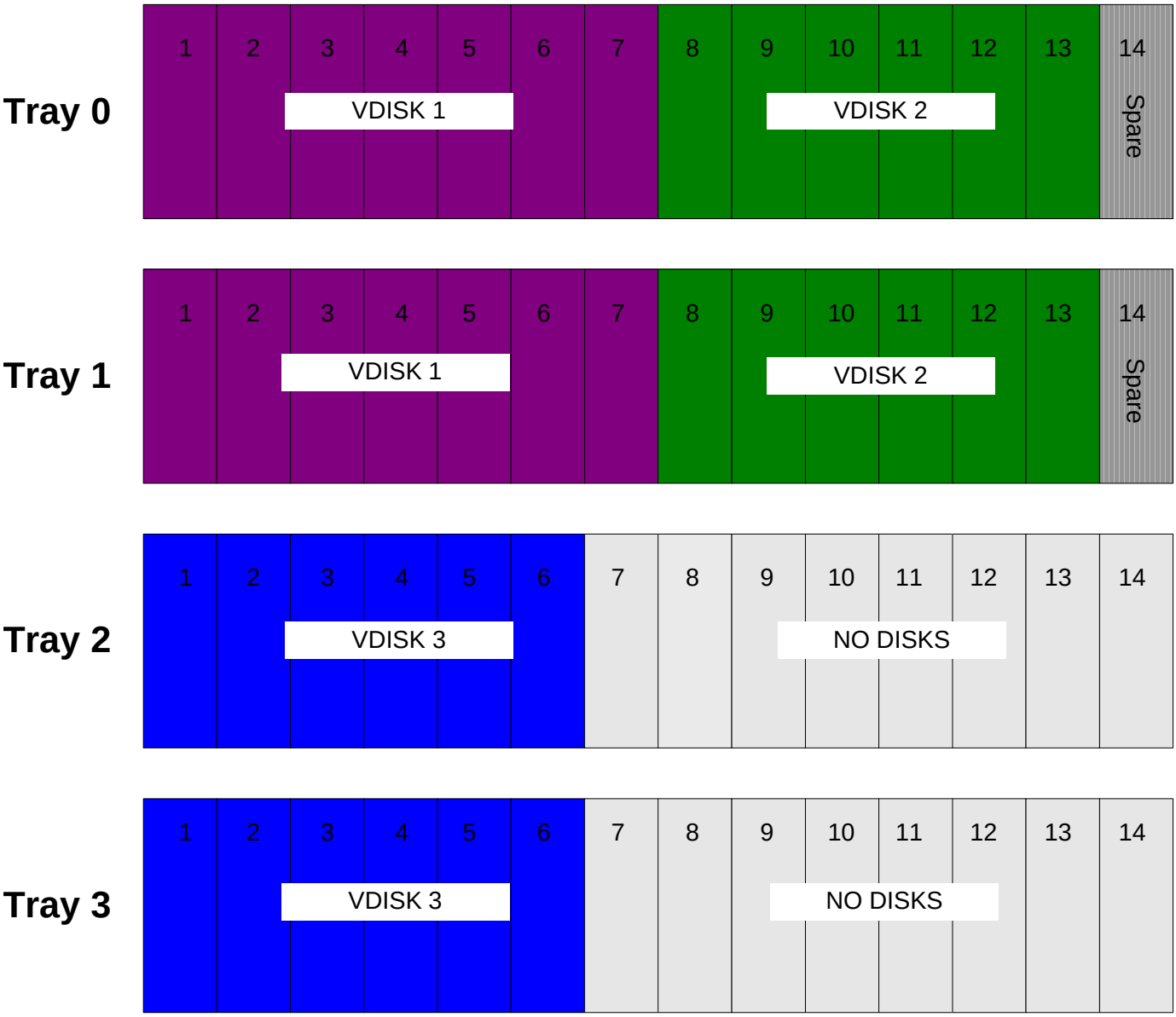
Tray 0
1 2 3 4 5 6 7 8 9 10 11 12 13 14
VDISK 1
VDISK 2
Spare
Tray 1
1 2 3 4 5 6 7 8 9 10 11 12 13 14
VDISK 1
VDISK 2
Spare
Tray 2
1 2 3 4 5 6 7 8 9 10 11 12 13 14
VDISK 3
NO DISKS
Tray 3
1 2 3 4 5 6 7 8 9 10 11 12 13 14
VDISK 3
NO DISKS

MDE 6130 VDisk Summary

VDisk	Capacity(GB)	Used(GB)	Free(GB)	Volumes	Snapshots
Vdisk-1	953	870	83	17	0
Vdisk-2	817	779	38	22	12
Vdisk-3	817	805	12	5	0

MDE 6130 Unassigned Disks Summary

Zero Free disks

MDE 6130 VDisk Details

VDisk 1 (Purple) 17 Volumes, RAID-1

1. msisb_db_u02 40GB WWN:600A0B800021FCDE0000012D4A37A35B
2. msisb_db_u03 90GB WWN:600A0B800021FCDE0000012C4A377007
3. msisb_db_u04 90GB WWN:600A0B80002200D4000055EF4A378336
4. msisb_db_u05 10GB WWN:600A0B80002200D4000055F04A37A8B6
5. msisb_db_u06 20GB WWN:600A0B80002200D4000055F24A37AB3E
6. msisb_db_u07 20GB WWN:600A0B800021FCDE0000012E4A37A9E7
7. msisb_db_u08 80GB WWN:600A0B80002200D4000055EE4A3768CC
8. msisb_db_u13 10GB WWN:600A0B800021FCDE000001324A389735
9. msisdb_u02 80GB WWN:600A0B800021FCDE000000DA44F70C87
10. msisdb_u03 90GB WWN:600A0B80002200D40000559B44F70D4E
11. msisdb_u04 90GB WWN:600A0B800021FCDE000000DB44F70D95
12. msisdb_u10_a 10GB WWN:600A0B800021FCDE000001134631FF9F
13. msisdb_u14 100GB WWN:600A0B80002200D4000055DD49BDFC28
14. nonmsisb_db_root 50GB WWN:600A0B800021FCDE000001254A2FABC3
15. nonmsisb_db_u01 30GB WWN:600A0B800021FCDE000001264A30EFC5
16. nonmsisb_db_u02 30GB WWN:600A0B80002200D4000055E94A30F91A
17. nonmsisb_db_u03 30GB WWN:600A0B80002200D4000055EB4A320F84

VDisk 2 (Green) 22 Volumes, 12 Snapshots, RAID-1

Volumes

1. msisb_db_root_mir	50GB	WWN:600A0B80002200D4000055ED4A3653C8
2. msisb_db_u09	80GB	WWN:600A0B80002200D4000055F34A37AFB2
3. msisb_db_u10	10GB	WWN:600A0B800021FCDE0000012F4A3889E9
4. msisb_db_u11	10GB	WWN:600A0B80002200D4000055F44A38945A
5. msisb_db_u12	10GB	WWN:600A0B800021FCDE000001304A389093
6. msisdb_u05	10GB	WWN:600A0B80002200D40000559C44F70E66
7. msisdb_u06	10GB	WWN:600A0B800021FCDE000000DC44F70F6B
8. msisdb_u07	10GB	WWN:600A0B80002200D40000559D44F70FFE
9. msisdb_u08	80GB	WWN:600A0B800021FCDE000000DD44F71051
10. msisdb_u09	80GB	WWN:600A0B80002200D40000559E44F710CE
11. msisdb_u10	5GB	WWN:600A0B800021FCDE000000DE44F71133
12. msisdb_u11	5GB	WWN:600A0B80002200D40000559F44F712C0
13. msisdb_u12	5GB	WWN:600A0B800021FCDE000000DF44F7139B
14. msisdb_u13	10GB	WWN:600A0B80002200D4000055A044F7141A
15. nonmsisb_db_root_mir	50GB	WWN:600A0B80002200D4000055E64A2FB15A
16. nonmsisb_db_u04	10GB	WWN:600A0B80002200D4000055E84A30F52A
17. nonmsisb_db_u05	10GB	WWN:600A0B800021FCDE000001274A30F41F
18. nonmsisb_db_u06	10GB	WWN:600A0B800021FCDE000001284A30F5F7
19. nonmsisb_db_u07	10GB	WWN:600A0B800021FCDE000001294A30F81D
20. nonmsisb_db_u08	10GB	WWN:600A0B800021FCDE0000012A4A30FAD5
21. nonmsisb_db_u09	10GB	WWN:600A0B80002200D4000056274A76B080
22. zenserver1	200GB	WWN:600A0B80002200D4000055E54A1406C0

Snapshot Reserves

1. msisdb_u02_ss	WWN:600A0B800021FCDE0000013A4A3F890D
2. msisdb_u03_ss	WWN:600A0B80002200D4000055F84A3F8D96
3. msisdb_u04_ss	WWN:600A0B800021FCDE0000015A4A41AC9F
4. msisdb_u05_ss	WWN:600A0B80002200D4000056144A41B128
5. msisdb_u06_ss	WWN:600A0B800021FCDE000001424A3F8987
6. msisdb_u07_ss	WWN:600A0B80002200D4000056004A3F8E08
7. msisdb_u08_ss	WWN:600A0B800021FCDE000001464A3F89BF
8. msisdb_u09_ss	WWN:600A0B80002200D4000056044A3F8E42
9. msisdb_u10_ss	WWN:600A0B800021FCDE000001524A407E69
10. msisdb_u11_ss	WWN:600A0B80002200D4000056104A4082F0
11. msisdb_u12_ss	WWN:600A0B800021FCDE0000014E4A3F8A3B
12. msisdb_u13_ss	WWN:600A0B80002200D40000560C4A3F8EC0

VDisk 3 (Blue) 5 Volumes, 1 Snapshot, RAID-1

Volumes

deptshare01	300GB	WWN:600A0B800021FCDE000000E244FD798B
gwcentral01	200GB	WWN:600A0B80002200D4000055A344FD7A20
gwdist01	200GB	WWN:600A0B800021FCDE000000E444FD7A4D
gwss01	50GB	WWN:600A0B80002200D4000055A444FD7ACA
msisb_db_root	50GB	WWN:600A0B80002200D4000055EC4A364DCA

Snapshot Reserves

msisdb_u10_a_ss	WWN:600A0B800021FCDE000001564A4092D1

MDE 6140

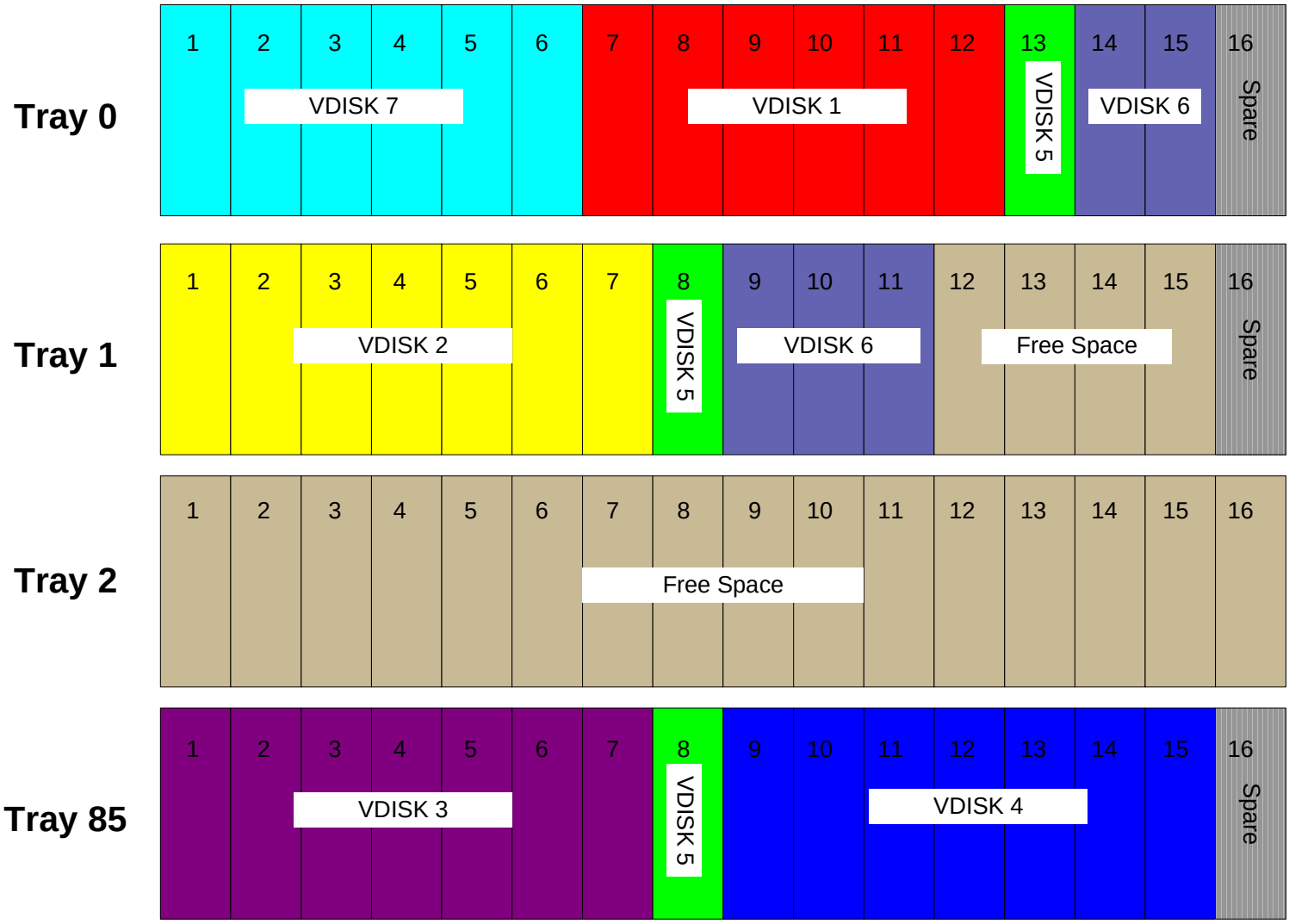
Tray 0
1 2 3 4 5 6 7 8 9 10 11 12 13 14 15 16
VDISK 7
VDISK 1
VDISK 5
VDISK 6
Spare
Tray 1
1 2 3 4 5 6 7 8 9 10 11 12 13 14 15 16
VDISK 2
VDISK 5
VDISK 6
Free Space
Spare
Tray 2
1 2 3 4 5 6 7 8 9 10 11 12 13 14 15 16
Free Space
Tray 85
1 2 3 4 5 6 7 8 9 10 11 12 13 14 15 16
VDISK 3
VDISK 5
VDISK 4
Spare

MDE 6140 VDisk Summary

VDisk	Capacity(GB)	Used(GB)	Free(GB)	Volumes	Snapshots
Vdisk-1	681	640	41	14	0
Vdisk-2	817	800	17	3	0
Vdisk-3	817	700	117	1	0
Vdisk-4	817	410	407	9	0
Vdisk-5	272	250	22	2	0
Vdisk-6	544	540	4	2	0
Vdisk-7	681	540	141	1	0

MDE 6140 Unassigned Disks Summary

Size(GB)	Number Free	Total Space(GB)
136	4	544
279	15	4,185

MDE 6140 VDisk Details

VDisk 1 (Red) 14 Volumes, RAID-5

Volumes

1. msisdb1_u02	80GB	WWN:600A0B8000261D8000000A3B4A67B9C4
2. msisdb1_u03	120GB	WWN:600A0B800029836200000B9D4A6793CB
3. msisdb1_u04	120GB	WWN:600A0B8000261D8000000A3C4A67BA5A
4. msisdb1_u05	10GB	WWN:600A0B800029836200000C064A699379
5. msisdb1_u06	30GB	WWN:600A0B8000261D8000000A894A69BA14
6. msisdb1_u07	20GB	WWN:600A0B8000261D8000000A914A69BA9A
7. msisdb1_u08	100GB	WWN:600A0B800029836200000B9E4A67947D
8. msisdb1_u09	100GB	WWN:600A0B8000261D8000000A3D4A67BAF2
9. nonmsisdb1_u04	10GB	WWN:600A0B8000261D8000000AF74A6C5046
10. nonmsisdb1_u05	10GB	WWN:600A0B800029836200000CAA4A6C2A51
11. nonmsisdb1_u06	10GB	WWN:600A0B8000261D8000000AF84A6C5106
12. nonmsisdb1_u07	10GB	WWN:600A0B800029836200000CAB4A6C2B43
13. nonmsisdb1_u08	10GB	WWN:600A0B8000261D8000000AF94A6C51D4
14. nonmsisdb1_u09	10GB	WWN:600A0B800029836200000CAC4A6C2BE7

VDisk 2 (Yellow) 3 Volumes, RAID-5

Volumes

1. msisdb1_root	50GB	WWN:600A0B8000298334000006FC4A13B1BC
2. nonmsisdb1_root	50GB	WWN:600A0B8000298334000007084A14F97A
3. Uservol_1a	700GB	WWN:600A0B8000261D8000000A724A698DA8

VDisk 3 (Magenta) 1 Volume, RAID-5

Volumes

1. uservol_01	700GB	WWN:600A0B8000261D8000000ABB4A69E4D6

VDisk 4 (Blue) 9 Volumes, RAID-5

Volumes

1. msisdb1_u10	30GB	WWN:600A0B800029836200000BF24A696A11
2. msisdb1_u11	10GB	WWN:600A0B8000261D8000000A744A6990F8
3. msisdb1_u12	10GB	WWN:600A0B800029836200000BF34A696BA5
4. msisdb1_u13	20GB	WWN:600A0B8000261D8000000A754A69924A
5. msisdb1_u14	150GB	WWN:600A0B8000298334000008BE4A4232A2
6. nonmsisdb1_u01	30GB	WWN:600A0B800029836200000CA84A6C28E5
7. nonmsisdb1_u02	30GB	WWN:600A0B8000261D8000000AF54A6C4F8A
8. nonmsisdb1_u03	30GB	WWN:600A0B800029836200000CA94A6C29AF
9. nonmsisdb1_u10	100GB	WWN:600A0B800029836200000BA84A68055D

VDisk 5 (Green) 2 Volumes, RAID-5

Volumes

1. gwclust_01	200GB	WWN:600A0B800029833400000064448E37D5E
2. msisdb1_root_mir	50GB	WWN:600A0B800029833400000007004A13B23C

VDisk 6 (Lavender) 2 Volumes, RAID-5

Volumes

1. DataStorSan_1a	500GB	WWN:600A0B8000261D8000000BCB4A8AD3D0
2. nonmsisdb1_root_mir	40GB	WWN:600A0B8000298334000088A4A3B49AA

VDisk 7 (Aqua) 1 Volume, RAID-5

Volumes

1. DataStorSan_1b	540GB	WWN:600A0B800029836200000DD74A8AAF27
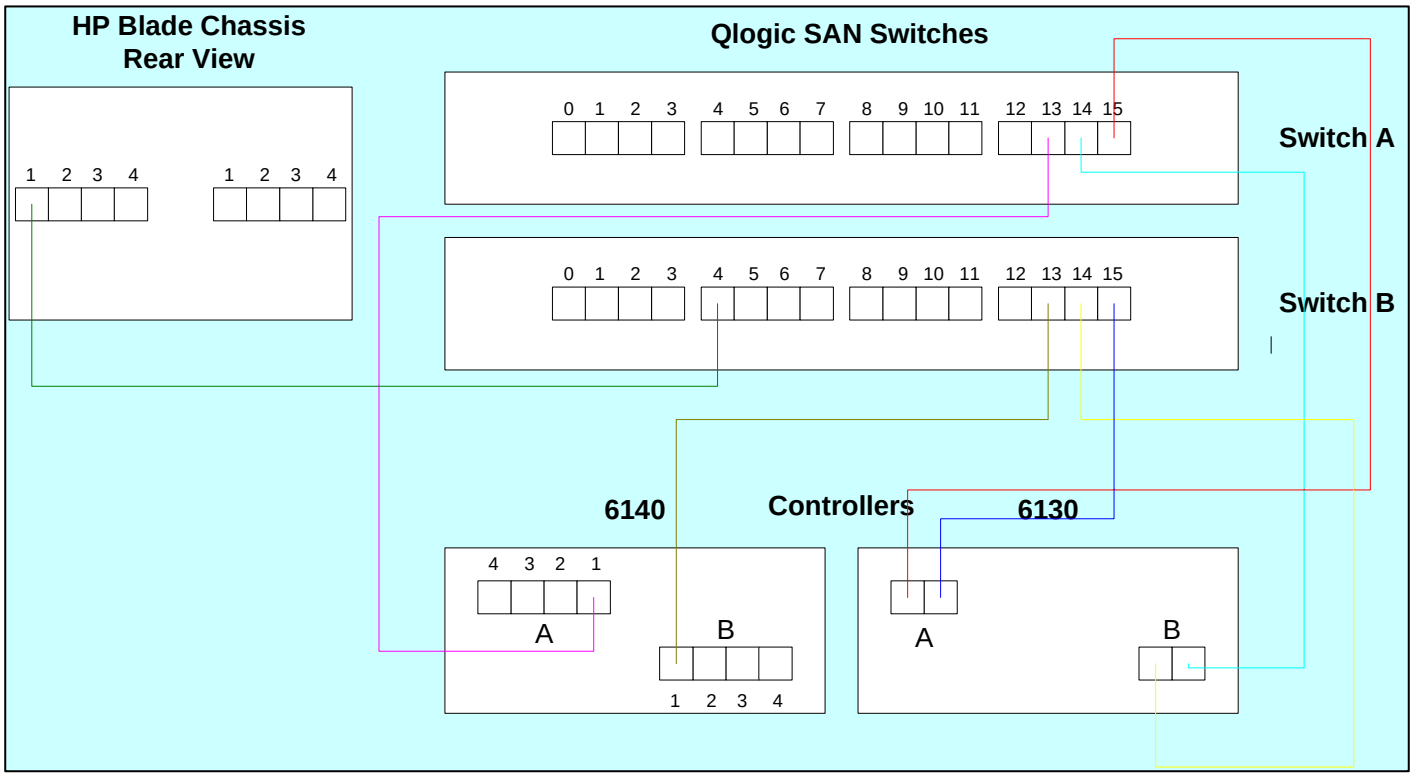
SAN Wiring Diagram