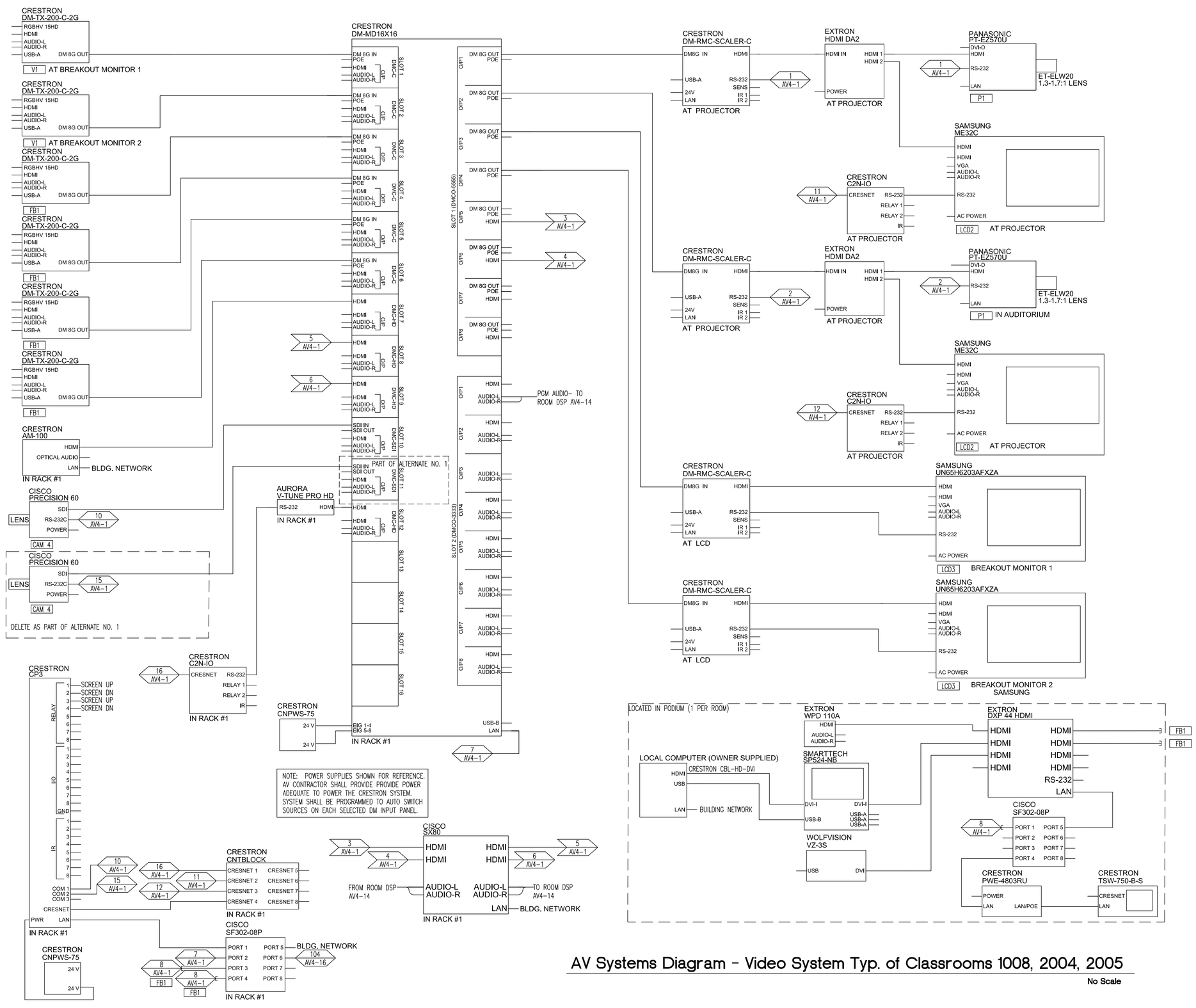

AV Systems Diagram - Video System Typ. of Classrooms 1008, 2004, 2005

No Scale

CONSULTANTS

PROFESSIONAL SEALS

PROJECT TITLE

COLLEGE OF BUSINESS BUILDING

THE UNIVERSITY OF SOUTHERN MISSISSIPPI

ISSUE

MARK	DATE	DESCRIPTION
	01/12/14	CONSTRUCTION DOCUMENTS

MANAGEMENT

PROJECT NO: 0606

PROJECT AREA:

CAD DWG FILE:

DRAWN BY: DTW

CHECKED BY:

SHEET TITLE

AV SYSTEMS DIAGRAMS

AV4-1

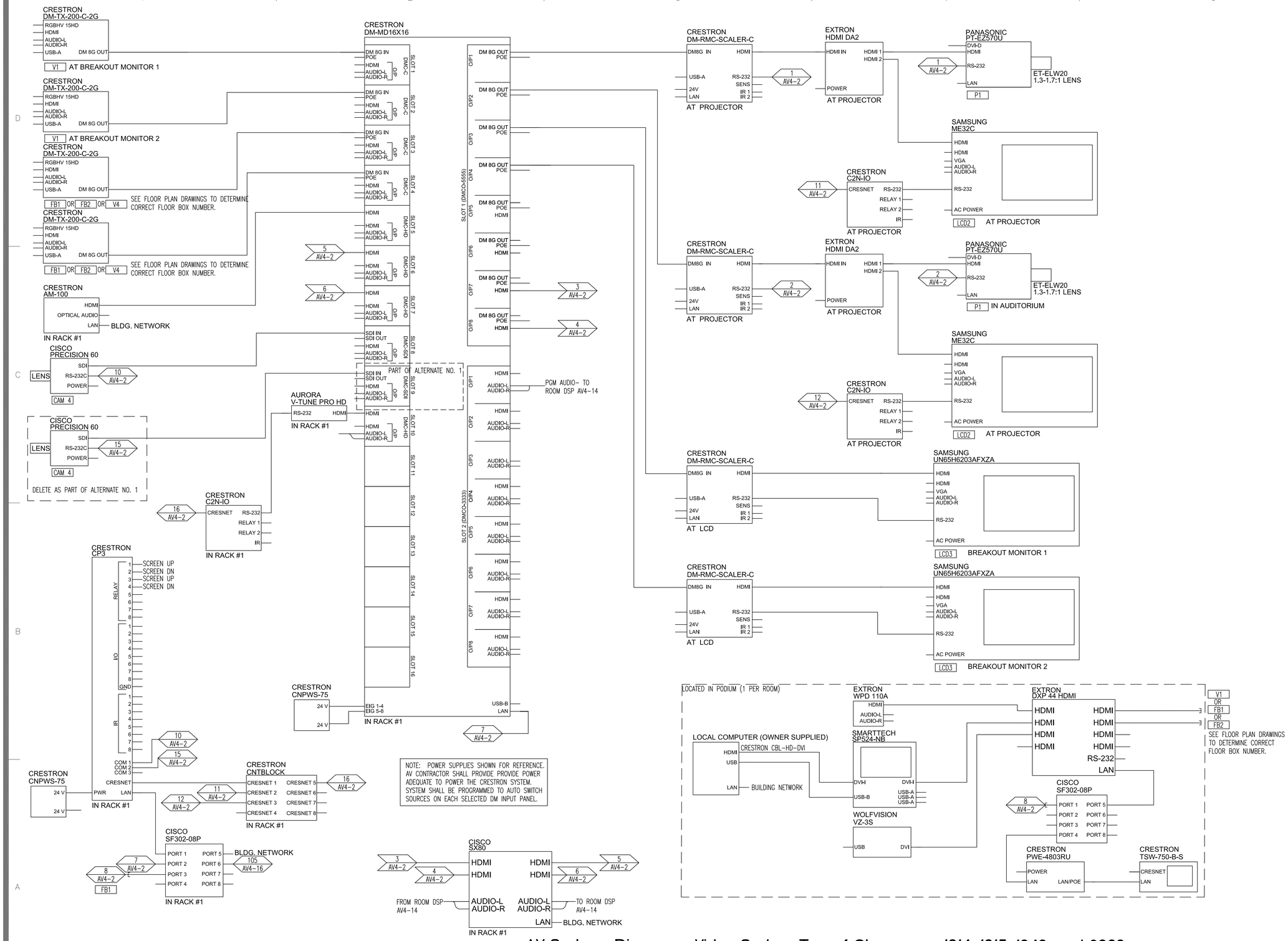

AV Systems Diagram - Video SystemsTyp. of Classrooms 1014, 1015, 1040, and 2009

No Scale

CONSULTANTS

PROFESSIONAL SEALS

PROJECT TITLE

COLLEGE OF BUSINESS BUILDING

THE UNIVERSITY OF SOUTHERN MISSISSIPPI

ISSUE

MARK	DATE	DESCRIPTION
	01/12/14	CONSTRUCTION DOCUMENTS

MANAGEMENT

PROJECT NO: 0606

PROJECT AREA:

CAD DWG FILE:

DRAWN BY: DTW

CHECKED BY:

SHEET TITLE

AV SYSTEMS DIAGRAMS

AV4-2

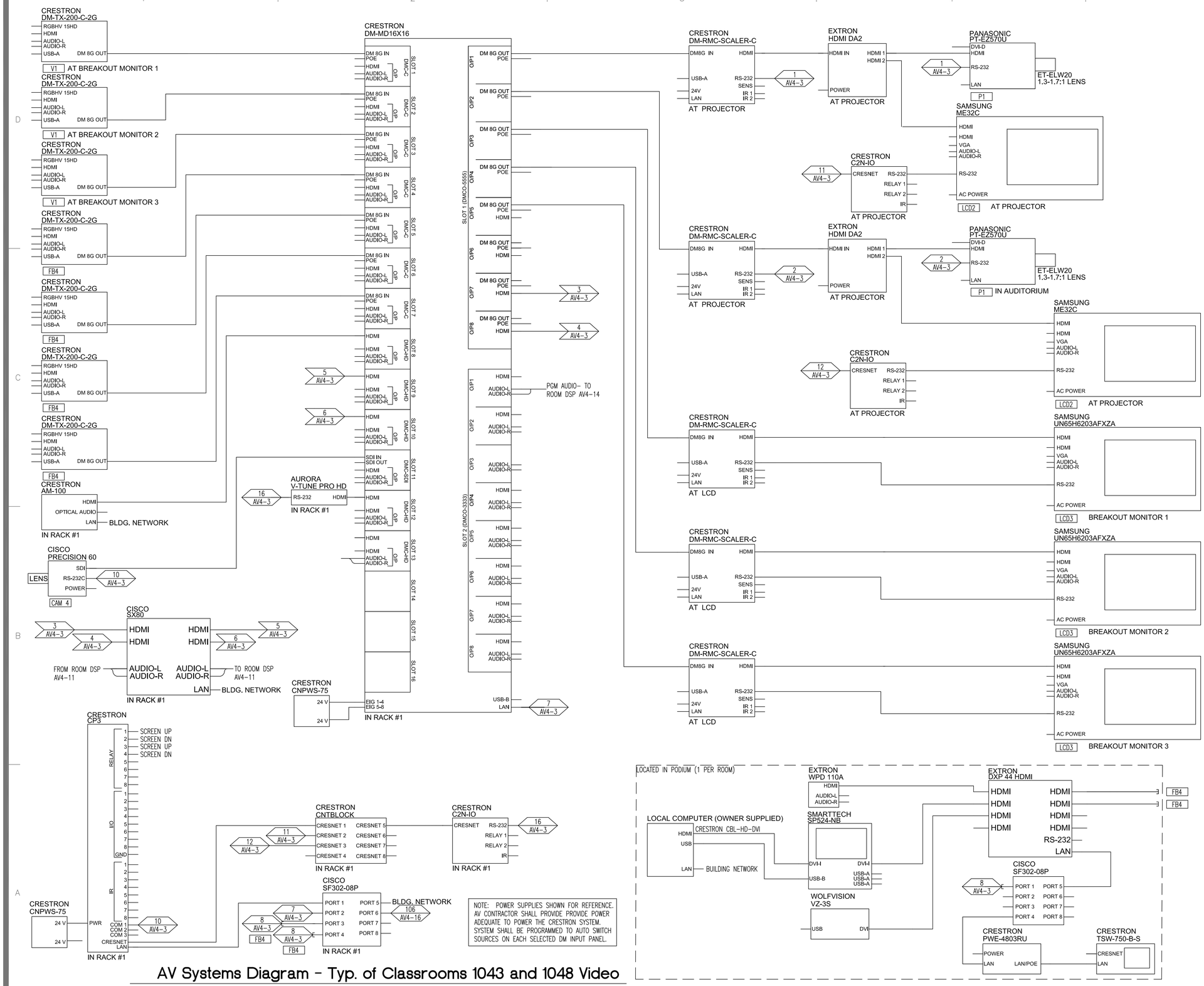

NOTE: POWER SUPPLIES SHOWN FOR REFERENCE. AV CONTRACTOR SHALL PROVIDE PROVIDE POWER ADEQUATE TO POWER THE CRESTRON SYSTEM. SYSTEM SHALL BE PROGRAMMED TO AUTO SWITCH SOURCES ON EACH SELECTED DM INPUT PANEL.

AV Systems Diagram - Typ. of Classrooms 1043 and 1048 Video

No Scale

CONSULTANTS

PROFESSIONAL SEALS

PROJECT TITLE

COLLEGE OF BUSINESS BUILDING

THE UNIVERSITY OF SOUTHERN MISSISSIPPI

ISSUE

MARK	DATE	DESCRIPTION
	01/12/14	CONSTRUCTION DOCUMENTS

MANAGEMENT

PROJECT NO: 0606

PROJECT AREA:

CAD DWG FILE:

DRAWN BY: DTW

CHECKED BY:

SHEET TITLE

AV SYSTEMS DIAGRAMS

AV4-3

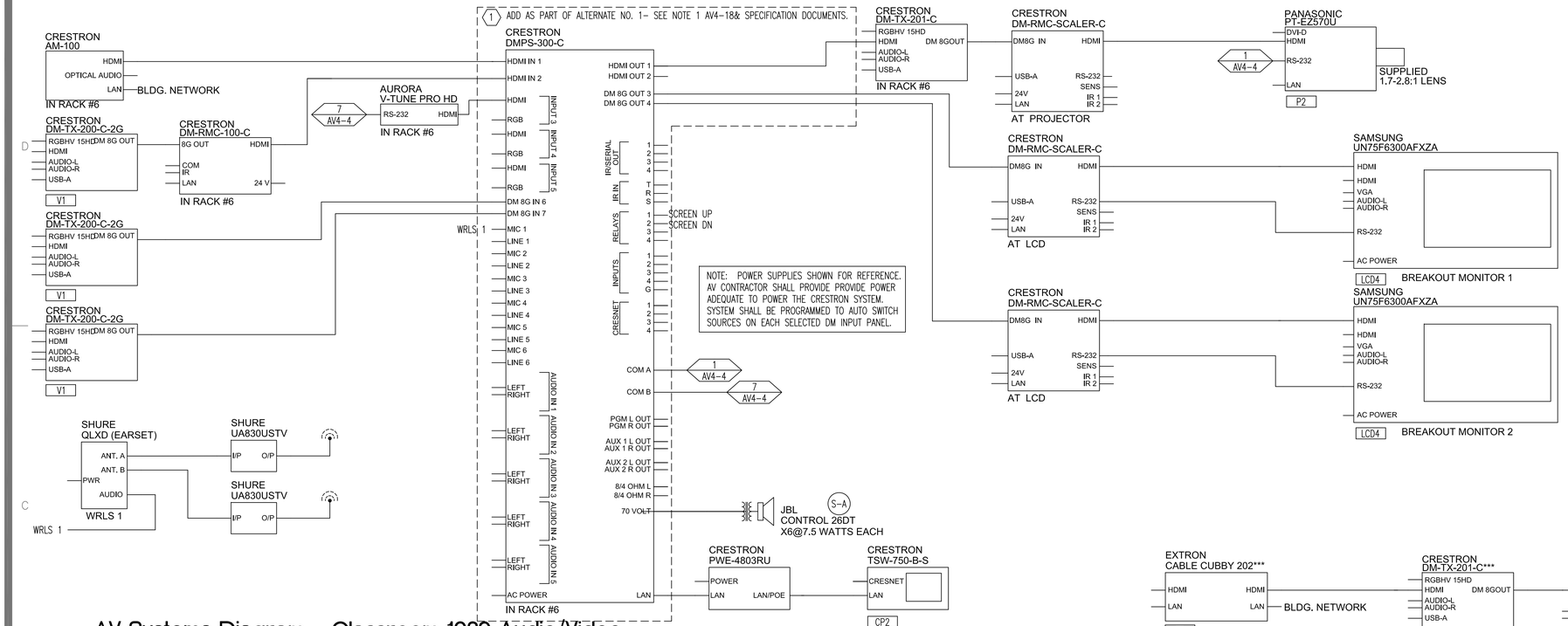

AV Systems Diagram - Classroom 1039 Audio/Video

No Scale

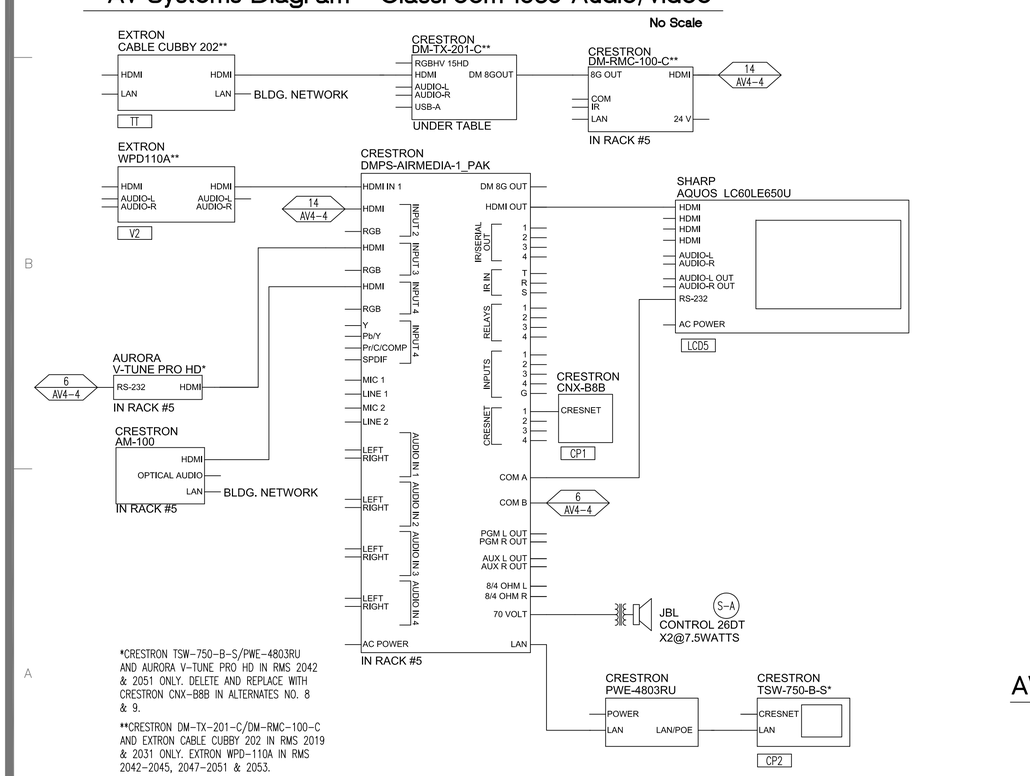

AV Systems Diagram - Rooms 2019, 2031, 2042-2045, 2047-2052 and 2053 Audio/Video

No Scale

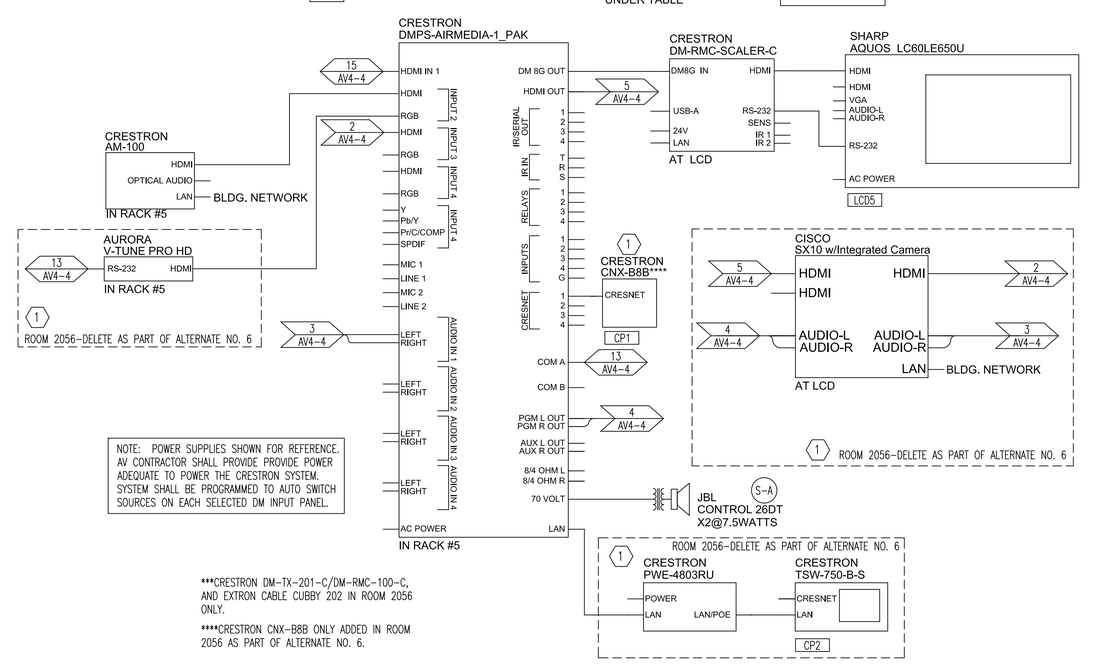

AV Systems Diagram - Conf. Room 2056, Deans Office 3109/Deans Conf. Rm. 3112 Audio/ Video

No Scale

SHEET KEYNOTES

1. ALTERNATE NO. 6- ROOM 2056 DELETIONS.
   ADD: ONE (1) CRESTRON CNX-B8B.

   DELETE: ONE (1) CRESTRON PWE-4803RU.
   ONE (1) CRESTRON TSW-750-B-S.
   ONE (1) CISCO SX10 W/INTEGRATED CAMERA. SEE SPECIFICATIONS.

CONSULTANTS

PROFESSIONAL SEALS

PROJECT TITLE

COLLEGE OF BUSINESS BUILDING

THE UNIVERSITY OF SOUTHERN MISSISSIPPI

ISSUE

MARK	DATE	DESCRIPTION
	01/12/14	CONSTRUCTION DOCUMENTS

MANAGEMENT

PROJECT NO: 0606
PROJECT AREA:
CAD DWG FILE:
DRAWN BY: DTW
CHECKED BY:
SHEET TITLE

AV SYSTEMS DIAGRAMS

AV4-4

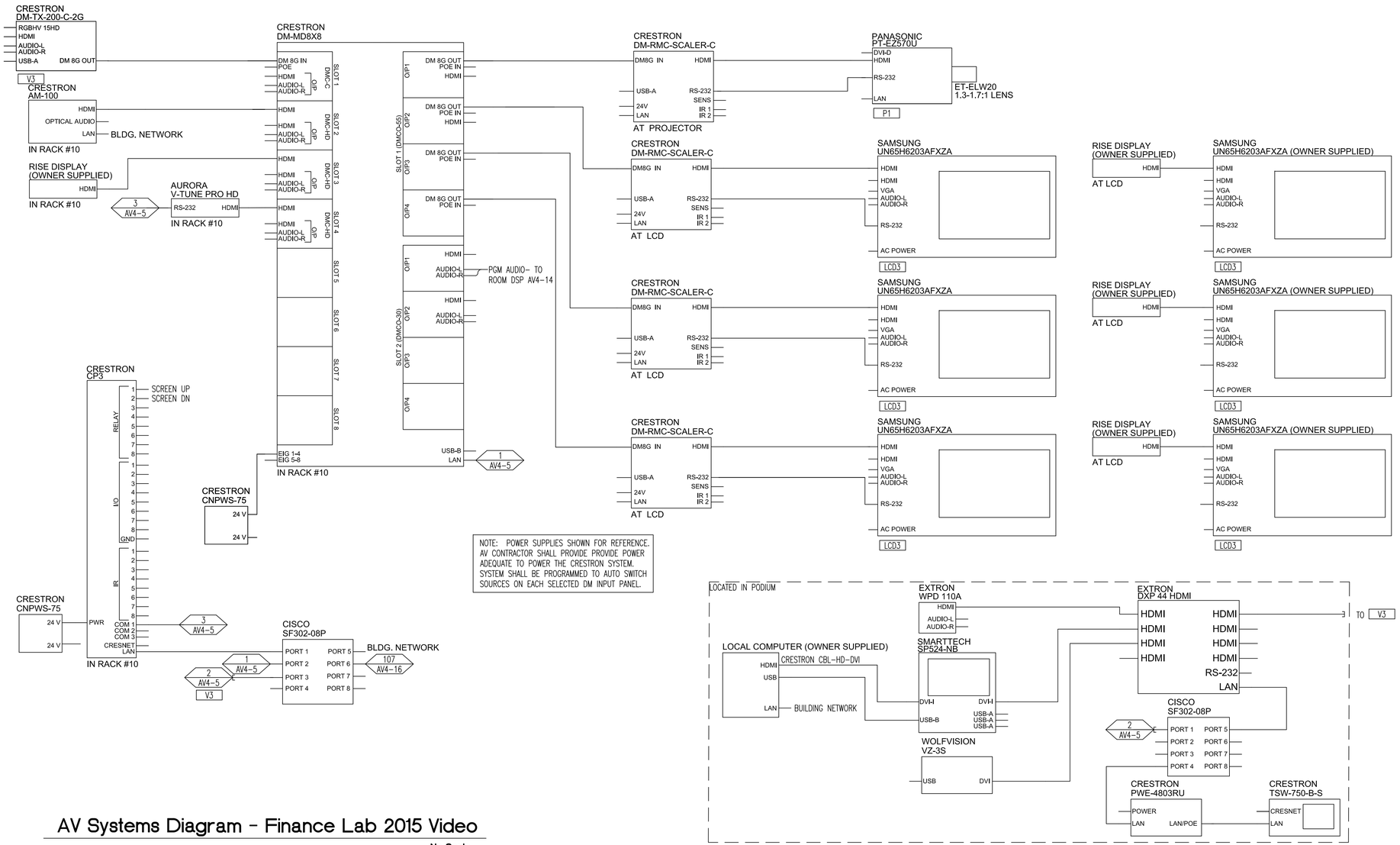

NOTE: POWER SUPPLIES SHOWN FOR REFERENCE. AV CONTRACTOR SHALL PROVIDE PROVIDE POWER ADEQUATE TO POWER THE CRESTRON SYSTEM. SYSTEM SHALL BE PROGRAMMED TO AUTO SWITCH SOURCES ON EACH SELECTED DM INPUT PANEL.

AV Systems Diagram - Finance Lab 2015 Video

No Scale

CONSULTANTS

PROFESSIONAL SEALS

PROJECT TITLE

COLLEGE OF BUSINESS BUILDING

THE UNIVERSITY OF SOUTHERN MISSISSIPPI

ISSUE

MARK	DATE	DESCRIPTION
	01/12/14	CONSTRUCTION DOCUMENTS

MANAGEMENT

PROJECT NO: 0606

PROJECT AREA:

CAD DWG FILE:

DRAWN BY: DTW

CHECKED BY:

SHEET TITLE

AV SYSTEMS DIAGRAMS

AV4-5

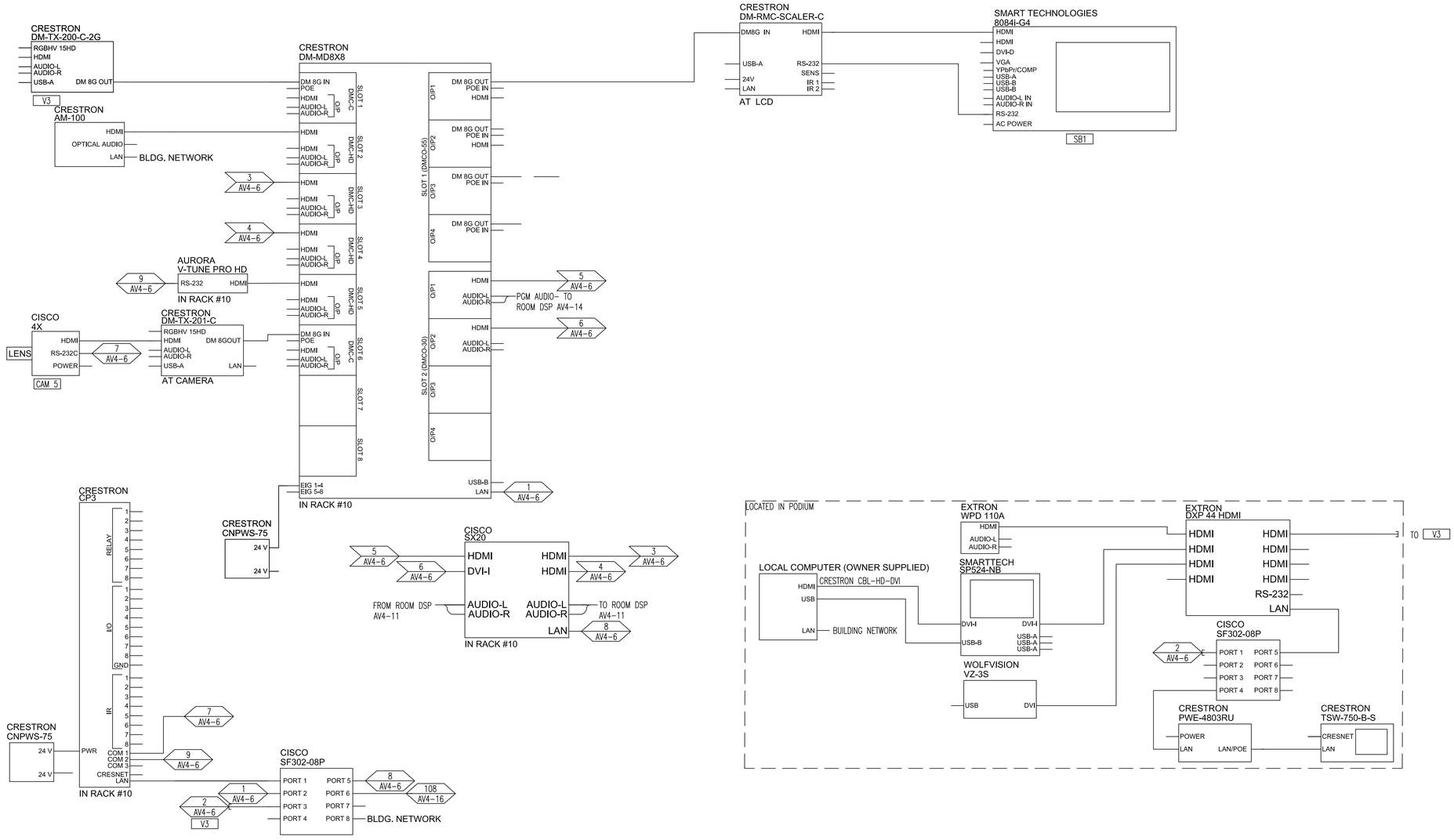

NOTE: POWER SUPPLIES SHOWN FOR REFERENCE. AV CONTRACTOR SHALL PROVIDE PROVIDE POWER ADEQUATE TO POWER THE CRESTRON SYSTEM. SYSTEM SHALL BE PROGRAMMED TO AUTO SWITCH SOURCES ON EACH SELECTED DM INPUT PANEL.

AV Systems Diagram - Center #2 2017 Video

No Scale

CONSULTANTS

PROFESSIONAL SEALS

PROJECT TITLE

COLLEGE OF BUSINESS BUILDING

THE UNIVERSITY OF SOUTHERN MISSISSIPPI

ISSUE

MARK	DATE	DESCRIPTION
	01/12/14	CONSTRUCTION DOCUMENTS

MANAGEMENT

PROJECT NO: 0606

PROJECT AREA:

CAD DWG FILE:

DRAWN BY: DTW

CHECKED BY:

SHEET TITLE

AV SYSTEMS DIAGRAMS

AV4-6

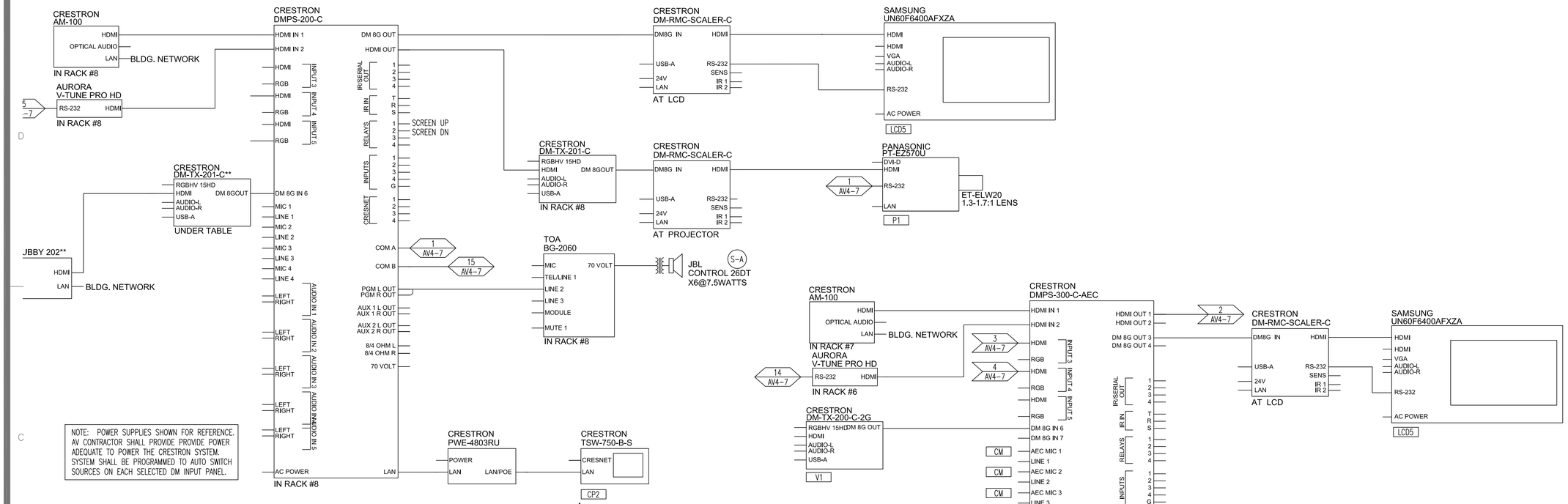

AV Systems Diagram - Faculty Lounge 3036 Audio/Video

No Scale

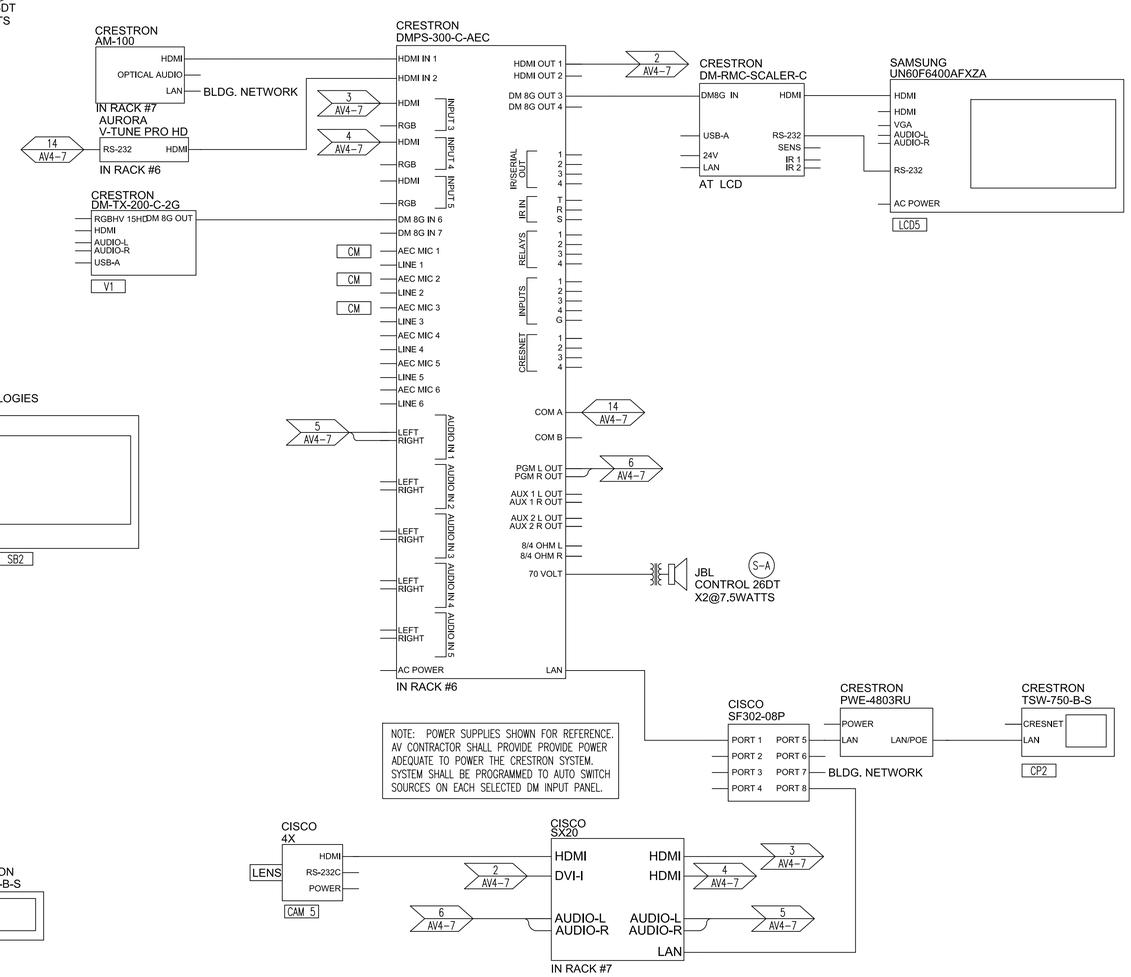

AV Systems Diagram - Accountng Conf. Rm. 3069 Audio/Video

No Scale

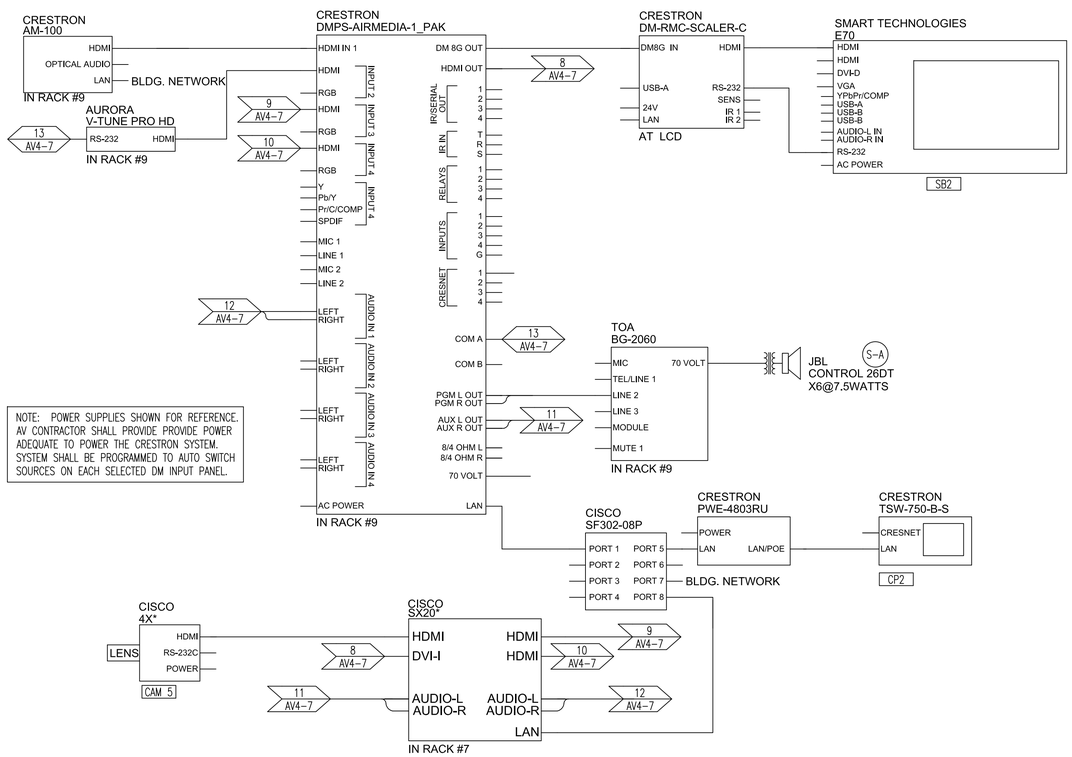

* VIDEO TELECONFERENCE SYSTEM FOR CONFERENCE ROOM 3042 IS EXISTING. AV CONTRACTOR SHALL INTEGRATE INTO AV SYSTEM.

AV Systems Diagram - Faculty Conf. Rm. 3042 Audio/Video

No Scale

CONSULTANTS

PROFESSIONAL SEALS

PROJECT TITLE

COLLEGE OF BUSINESS BUILDING

THE UNIVERSITY OF SOUTHERN MISSISSIPPI

ISSUE

MARK	DATE	DESCRIPTION
	01/12/14	CONSTRUCTION DOCUMENTS

MANAGEMENT

PROJECT NO: 0606

PROJECT AREA:

CAD DWG FILE:

DRAWN BY: DTW

CHECKED BY:

SHEET TITLE

AV SYSTEMS DIAGRAMS

AV4-7

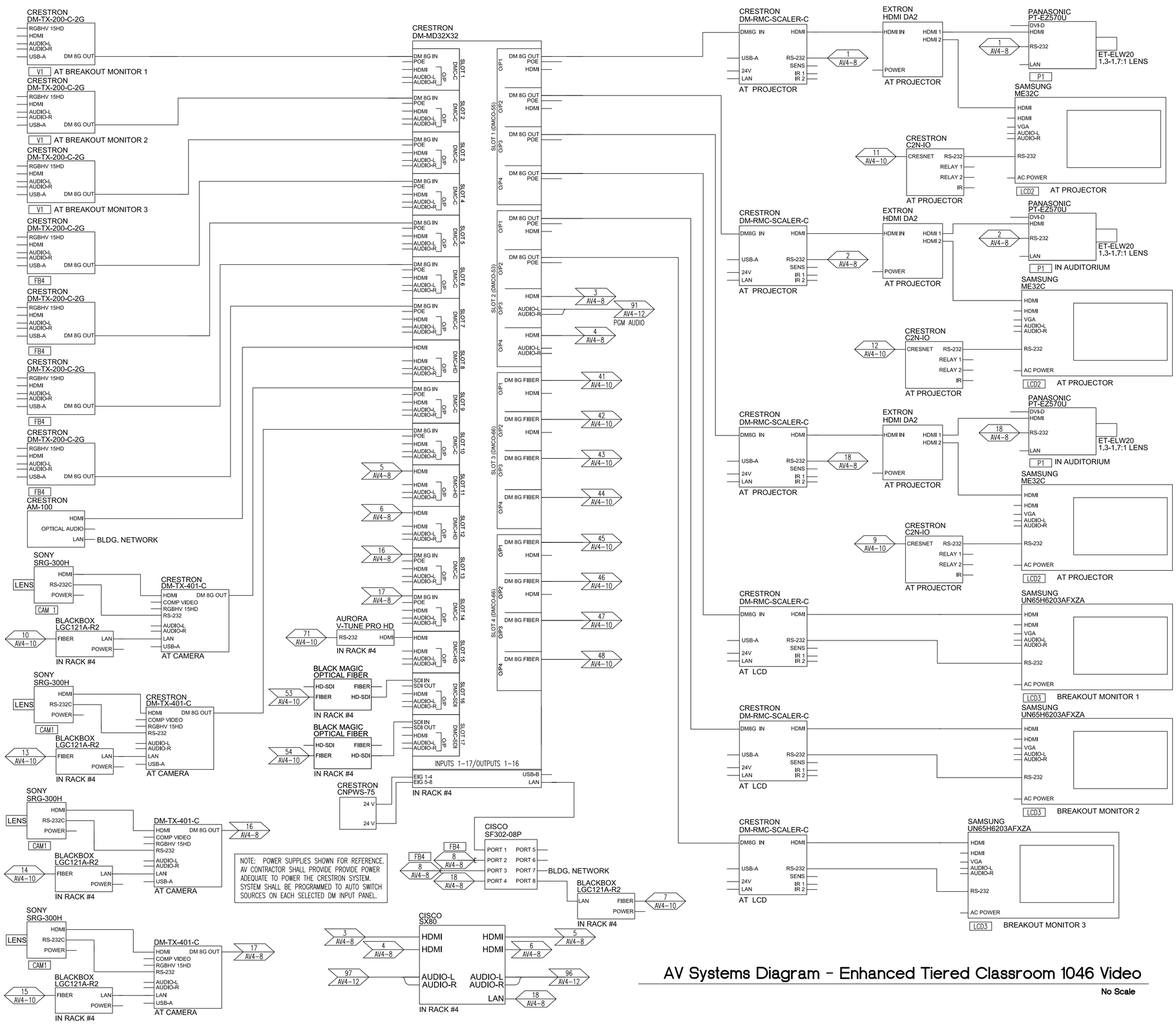

NOTE: POWER SHOWN FOR REFERENCE. AV CONTRACTOR SHALL PROVIDE PROVIDE POWER ADEQUATE TO POWER THE CRESTRON SYSTEM. SYSTEM SHALL BE PROGRAMMED TO AUTO SWITCH SOURCES ON EACH SELECTED DM INPUT PANEL.

AV Systems Diagram - Enhanced Tiered Classroom 1046 Video

No Scale

CONSULTANTS

PROFESSIONAL SEALS

PROJECT TITLE

COLLEGE OF BUSINESS BUILDING

THE UNIVERSITY OF SOUTHERN MISSISSIPPI

ISSUE

MARK	DATE	DESCRIPTION
	01/12/14	CONSTRUCTION DOCUMENTS

MANAGEMENT

PROJECT NO: 0606

PROJECT AREA:

CAD DWG FILE:

DRAWN BY: DTW

CHECKED BY:

SHEET TITLE

AV SYSTEMS DIAGRAMS

AV4-8

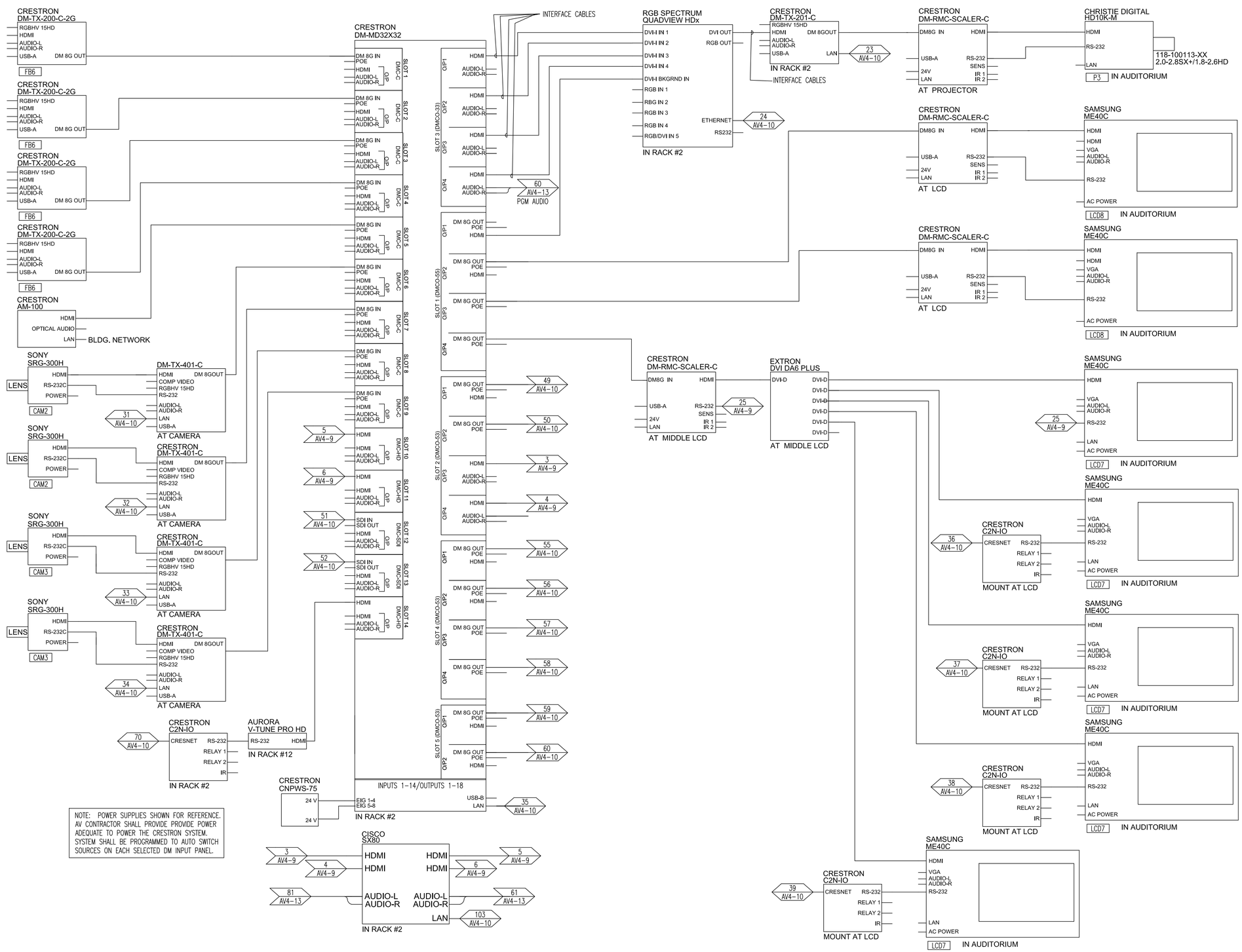

NOTE: POWER SUPPLIES SHOWN FOR REFERENCE. AV CONTRACTOR SHALL PROVIDE POWER ADEQUATE TO POWER THE CRESTRON SYSTEM. SYSTEM SHALL BE PROGRAMMED TO AUTO SWITCH SOURCES ON EACH SELECTED DM INPUT PANEL.

AV Systems Diagram - Auditorium 1003 Video

No Scale

CONSULTANTS

PROFESSIONAL SEALS

PROJECT TITLE

COLLEGE OF BUSINESS BUILDING

THE UNIVERSITY OF SOUTHERN MISSISSIPPI

ISSUE

MARK	DATE	DESCRIPTION
	01/12/14	CONSTRUCTION DOCUMENTS

MANAGEMENT

PROJECT NO: 0606

PROJECT AREA:

CAD DWG FILE:

DRAWN BY: DTW

CHECKED BY:

SHEET TITLE

AV SYSTEMS DIAGRAMS

AV4-9

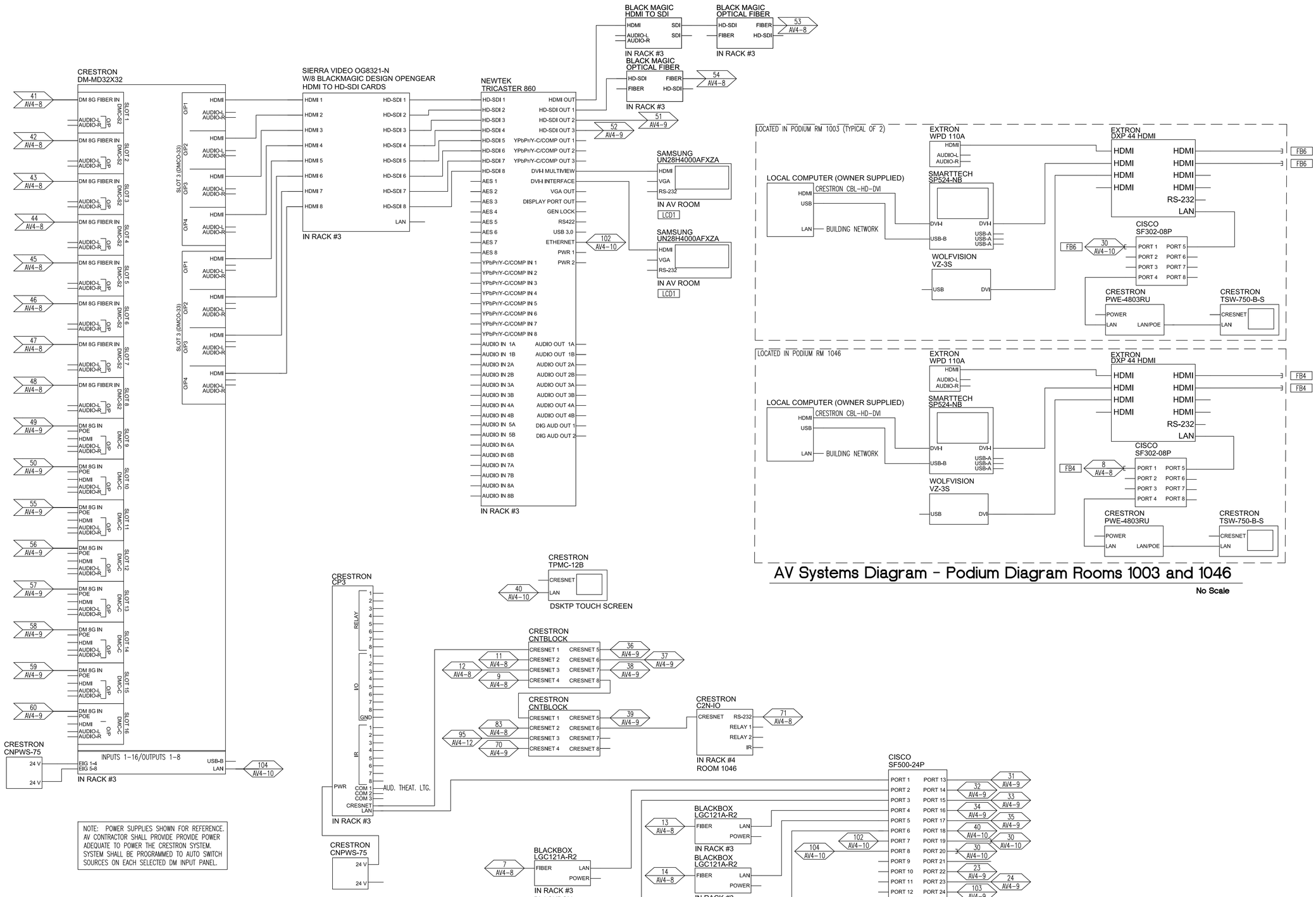

AV Systems Diagram - Podium Diagram Rooms 1003 and 1046

No Scale

AV Systems Diagram - Media Control 1001- Page 1

No Scale

CONSULTANTS

PROFESSIONAL SEALS

PROJECT TITLE

COLLEGE OF BUSINESS BUILDING

THE UNIVERSITY OF SOUTHERN MISSISSIPPI

ISSUE

MARK	DATE	DESCRIPTION
	01/12/14	CONSTRUCTION DOCUMENTS

MANAGEMENT

PROJECT NO: 0606

PROJECT AREA:

CAD DWG FILE:

DRAWN BY: DTW

CHECKED BY:

SHEET TITLE

AV SYSTEMS DIAGRAMS

AV4-10

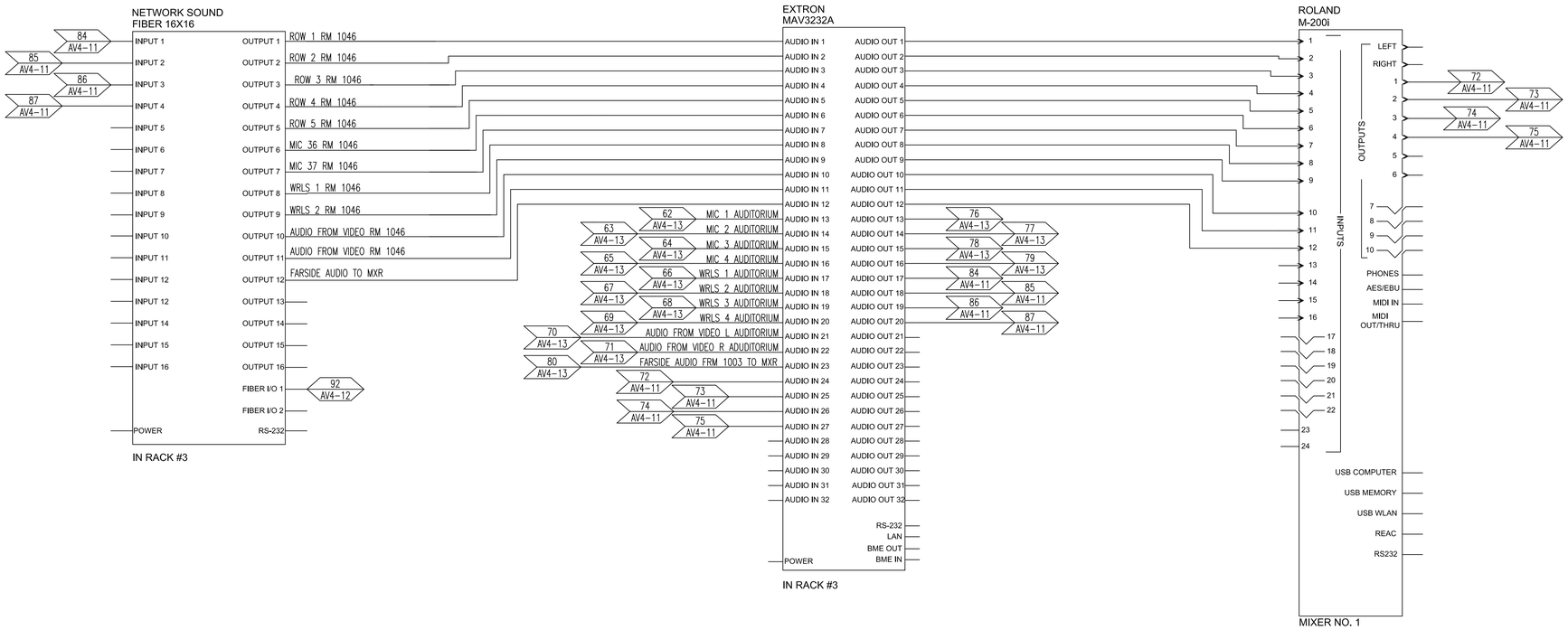

AV Systems Diagram - Media Control 1001- Page 2

No Scale

CONSULTANTS

PROFESSIONAL SEALS

PROJECT TITLE

COLLEGE OF BUSINESS BUILDING

THE UNIVERSITY OF SOUTHERN MISSISSIPPI

ISSUE

MARK	DATE	DESCRIPTION
	01/12/14	CONSTRUCTION DOCUMENTS

MANAGEMENT

PROJECT NO: 0606

PROJECT AREA:

CAD DWG FILE:

DRAWN BY: DTW

CHECKED BY:

SHEET TITLE

AV SYSTEMS DIAGRAMS

AV4-11

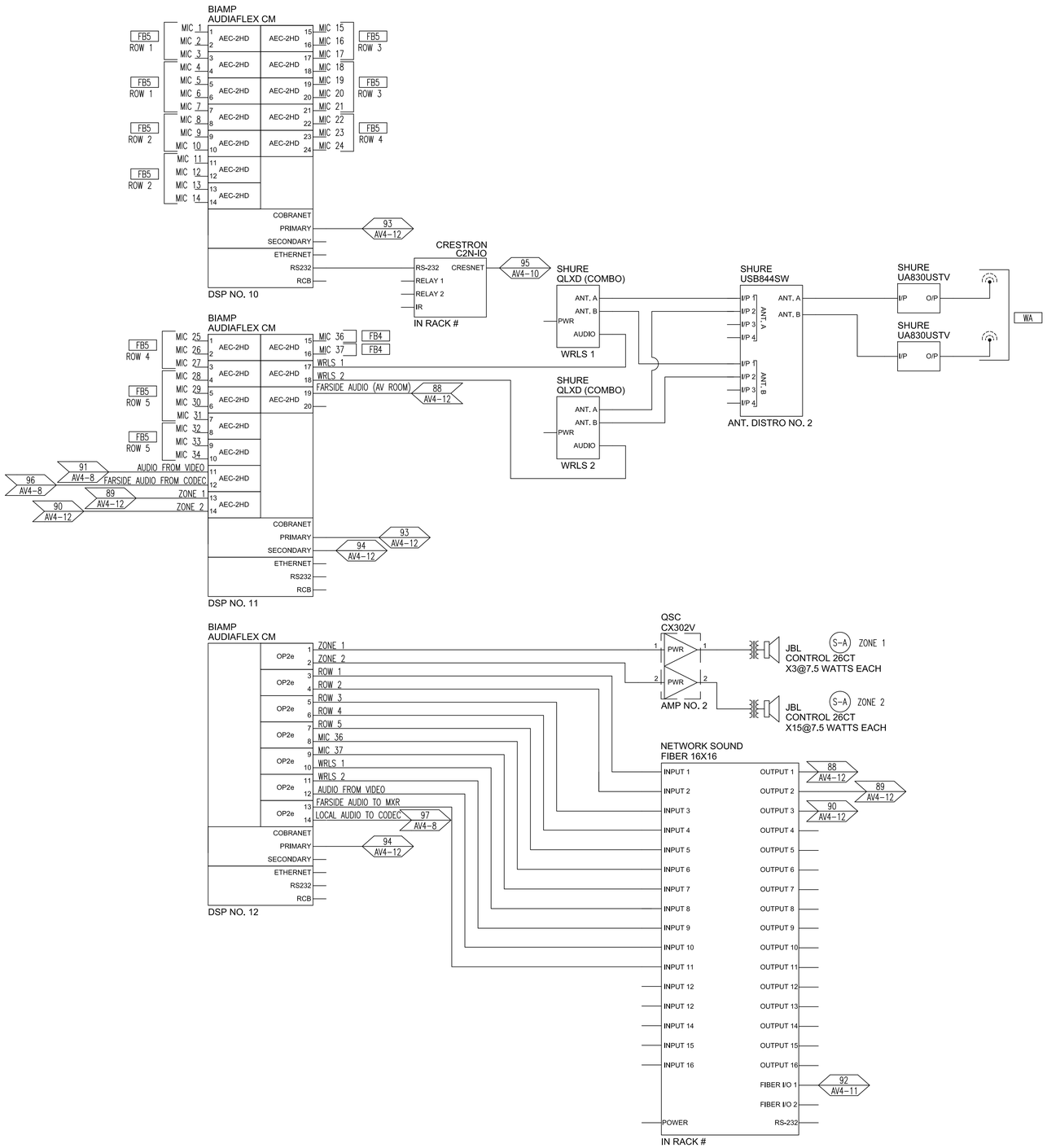

AV Systems Diagram - Enhanced Tiered Classroom 1046 Audio

No Scale

CONSULTANTS

PROFESSIONAL SEALS

PROJECT TITLE

COLLEGE OF BUSINESS BUILDING

THE UNIVERSITY OF SOUTHERN MISSISSIPPI

ISSUE

MARK	DATE	DESCRIPTION
	01/12/14	CONSTRUCTION DOCUMENTS

MANAGEMENT

PROJECT NO: 0606

PROJECT AREA:

CAD DWG FILE:

DRAWN BY: DTW

CHECKED BY:

SHEET TITLE

AV SYSTEMS DIAGRAMS

AV4-12

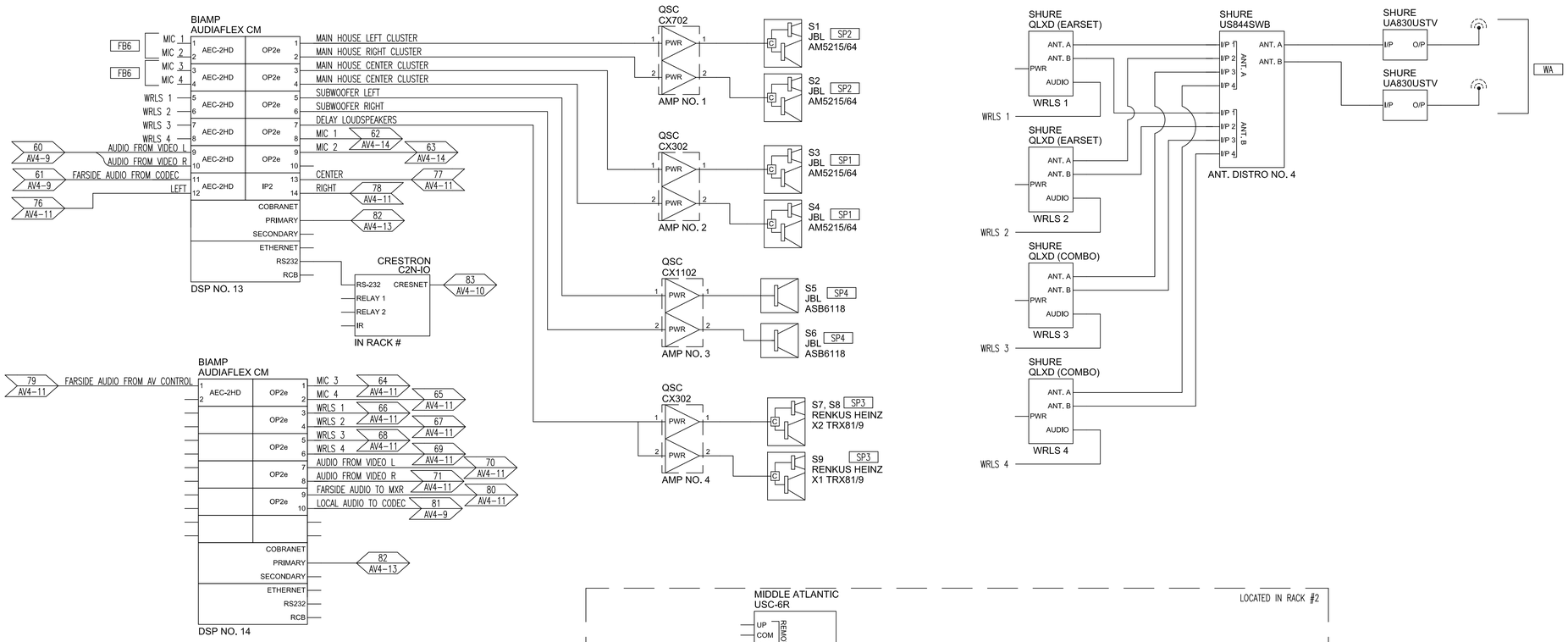

AV Systems Diagram - Auditorium 1003 Audio

No Scale

AV Systems Diagram - Auditorium 1003 Power

No Scale

CONSULTANTS

PROFESSIONAL SEALS

PROJECT TITLE

COLLEGE OF
BUSINESS BUILDING

THE UNIVERSITY OF
SOUTHERN MISSISSIPPI

ISSUE

MARK	DATE	DESCRIPTION
	01/12/14	CONSTRUCTION DOCUMENTS

MANAGEMENT

PROJECT NO: 0606
PROJECT AREA:
CAD DWG FILE:
DRAWN BY: DTW
CHECKED BY:

SHEET TITLE

AV SYSTEMS
DIAGRAMS

AV4-13

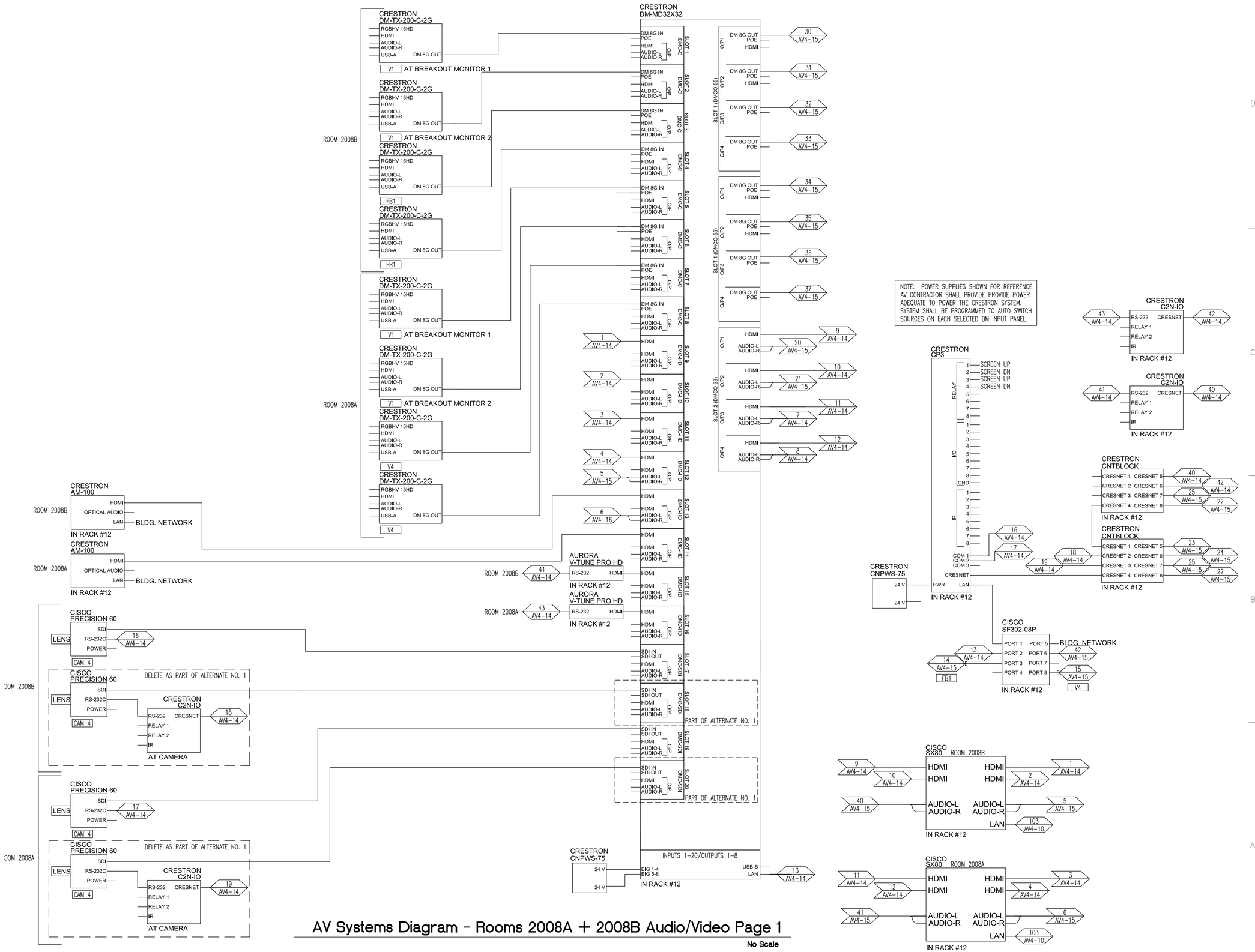

CONSULTANTS

PROFESSIONAL SEALS

PROJECT TITLE

COLLEGE OF BUSINESS BUILDING

THE UNIVERSITY OF SOUTHERN MISSISSIPPI

ISSUE

MARK	DATE	DESCRIPTION
	01/12/14	CONSTRUCTION DOCUMENTS

MANAGEMENT

PROJECT NO: 0606

PROJECT AREA:

CAD DWG FILE:

DRAWN BY: DTW

CHECKED BY:

SHEET TITLE

AV SYSTEMS DIAGRAMS

AV4-14

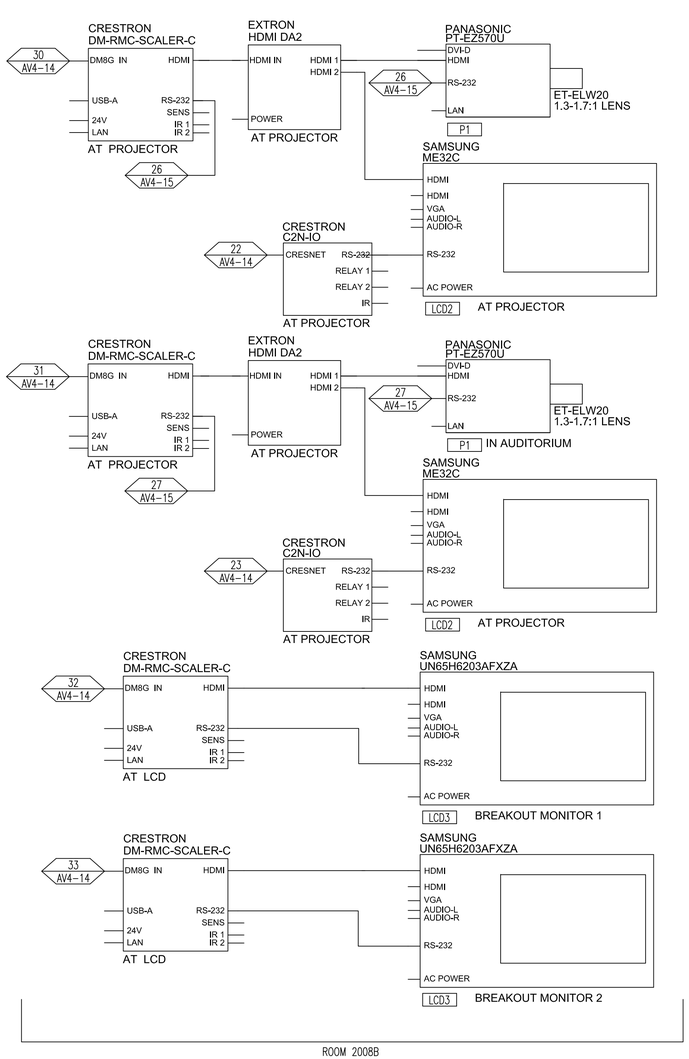

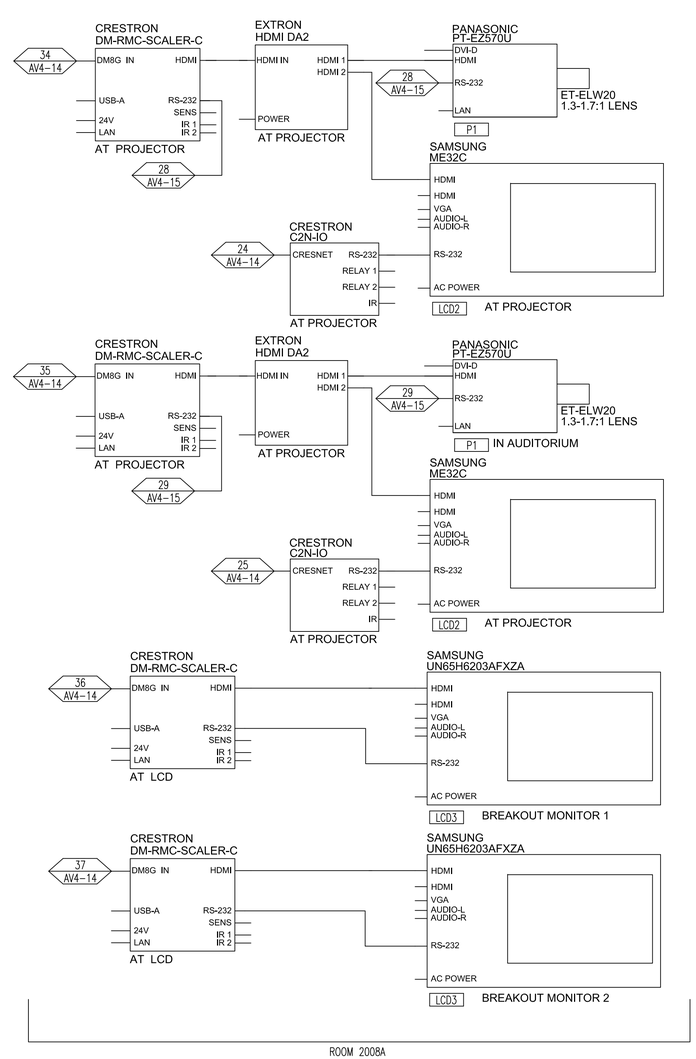

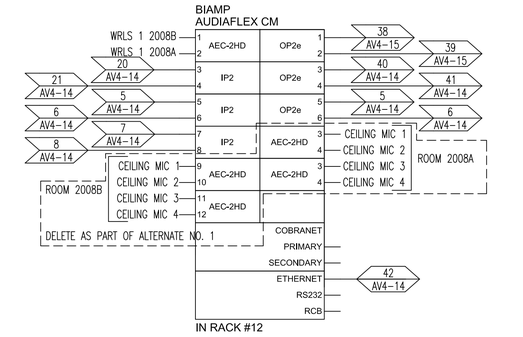

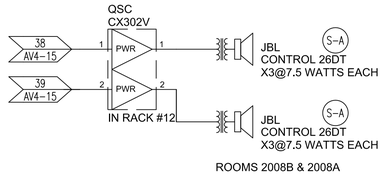

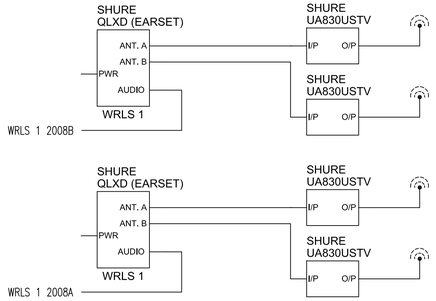

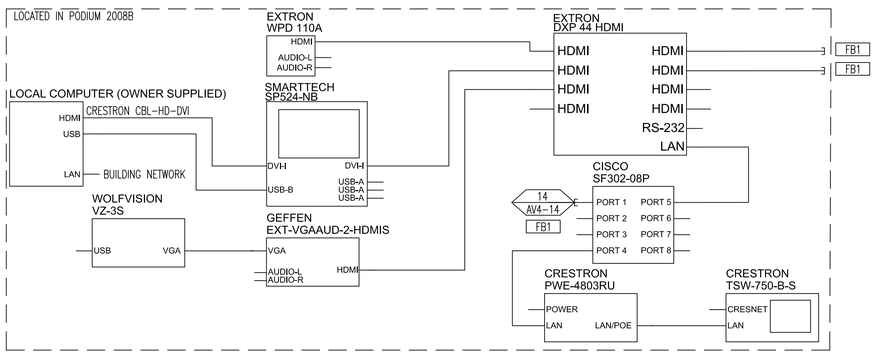

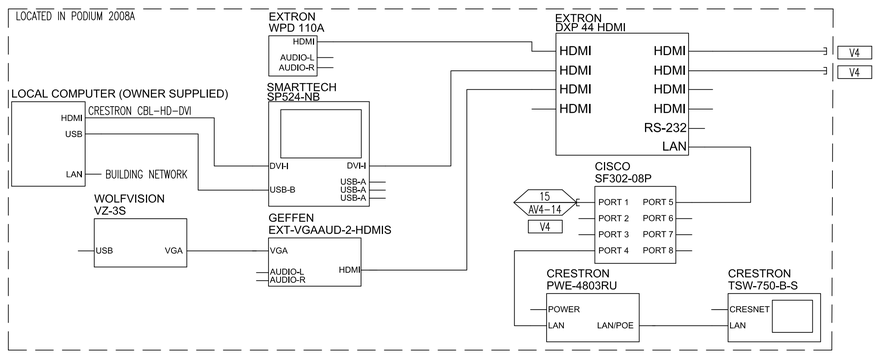

AV Systems Diagram - Rooms 2008A and 2008B Audio/Video Page 2

No Scale

CONSULTANTS

PROFESSIONAL SEALS

PROJECT TITLE

COLLEGE OF BUSINESS BUILDING

THE UNIVERSITY OF SOUTHERN MISSISSIPPI

ISSUE

MARK	DATE	DESCRIPTION
	01/12/14	CONSTRUCTION DOCUMENTS

MANAGEMENT

PROJECT NO: 0606

PROJECT AREA:

CAD DWG FILE:

DRAWN BY: DTW

CHECKED BY:

SHEET TITLE

AV SYSTEMS DIAGRAMS

AV4-15

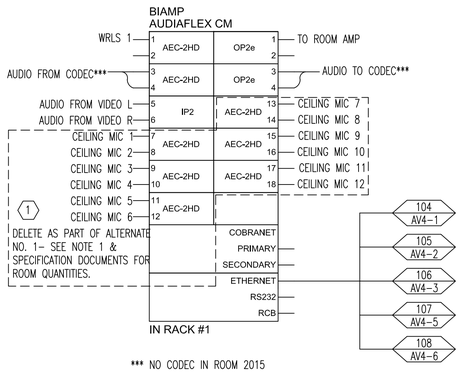

*** NO CODEC IN ROOM 2015

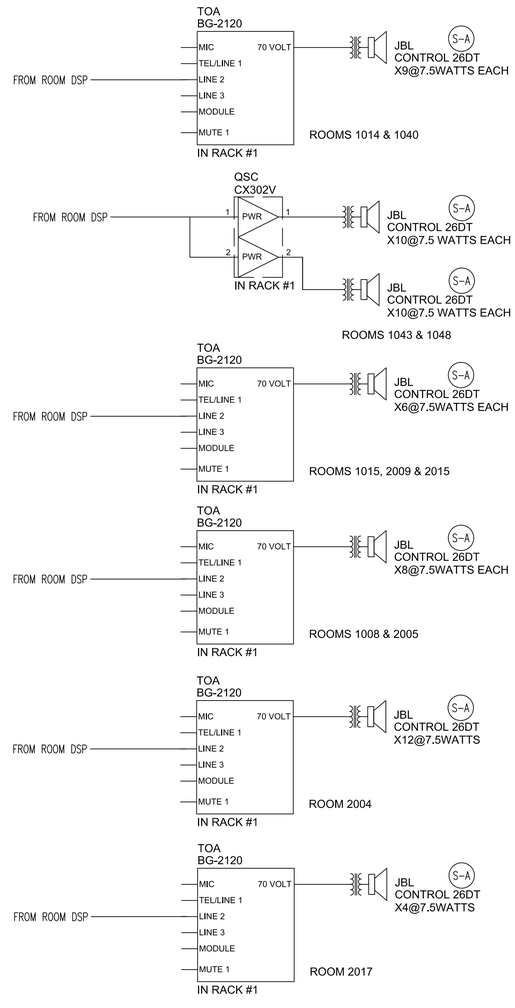

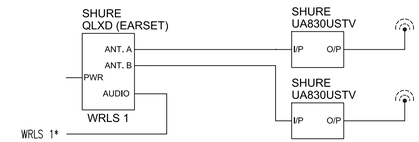

SHEET KEYNOTES

1. ALTERNATE NO. 1- DISTANCE LEARNING DELETIONS. DELETION OF SHURE MX202WP/C CEILING MICROPHONES AND BIAMP AEC-2HD DSP INPUT MODULES. THE NUMBER OF MODULES AND MICROPHONES PER ROOM IS AS FOLLOWS:
   - ROOM 1008: EIGHT (8) SHURE MX202WP/C. FOUR (4) BIAMP AEC-2HD.
   - ROOM 1014: NINE (9) SHURE MX202WP/C. FIVE (5) BIAMP AEC-2HD.
   - ROOM 1015: SIX (6) SHURE MX202WP/C. THREE (3) BIAMP AEC-2HD.
   - ROOM 1040: NINE (9) SHURE MX202WP/C. FIVE (5) BIAMP AEC-2HD.
   - ROOM 2004: TWELVE (12) SHURE MX202WP/C. SIX (6) BIAMP AEC-2HD.
   - ROOM 2005: EIGHT (8) SHURE MX202WP/C. FOUR (4) BIAMP AEC-2HD.
   - ROOM 2009: SIX (6) SHURE MX202WP/C. THREE (3) BIAMP AEC-2HD.

   MOUNT ALL CEILING MICROPHONES TO PROVIDE EVEN COVERAGE IN EACH ROOM.

AV Systems Diagram -Typ. of Rooms 1008, 1014, 1015, 1040, 1043, 1048, 2004, 2005, 2009, 2015 and 2017 Audio

No Scale

CONSULTANTS

PROFESSIONAL SEALS

PROJECT TITLE

COLLEGE OF BUSINESS BUILDING

THE UNIVERSITY OF SOUTHERN MISSISSIPPI

ISSUE

MARK	DATE	DESCRIPTION
	01/12/14	CONSTRUCTION DOCUMENTS

MANAGEMENT

PROJECT NO: 0606

PROJECT AREA:

CAD DWG FILE:

DRAWN BY: DTW

CHECKED BY:

SHEET TITLE

AV SYSTEMS DIAGRAMS

AV4-16

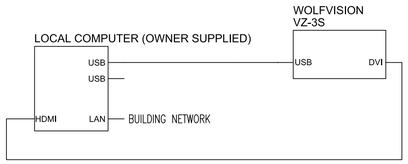

AV Systems Diagram - Recording Studio 3040 Audio/Video

No Scale

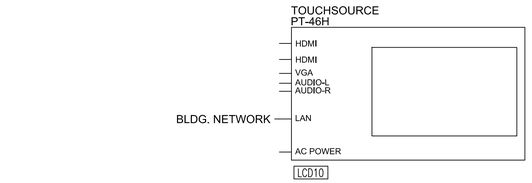

ROOMS 1020, 1034, 2007.1 & 2041.1 ONE (1) TOUCHPANEL & DIGITAL MEDIA PLAYER IN EACH LOCATION.

AV CONTRACTOR SHALL COORDINATE WITH STAFF IT PERSONNEL TO ENSURE PROPER BUILDING NETWORK ACCESS TO ALL DIGITAL SIGNAGE LOCATIONS.

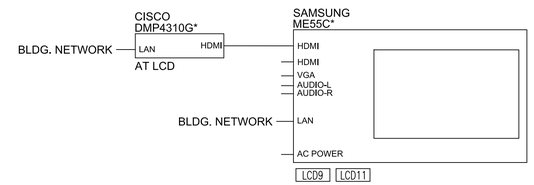

*ROOM 1028: FOUR (4) LCD FLAT PANELS & FOUR (4) DIGITAL MEDIA PLAYERS. ROOMS FIRST FLOOR PORCH LEFT, FIRST FLOOR PORCH RIGHT, 2025, 2035, 2046, 2055, 3013, 3021, 3048 LEFT, 3048 RIGHT, 3067, 3074 AND 3103, 3114: ONE (1) LCD FLAT PANEL & ONE (1) DIGITAL MEDIA PLAYER IN EACH LOCATION.

AV CONTRACTOR SHALL COORDINATE WITH STAFF IT PERSONNEL TO ENSURE PROPER BUILDING NETWORK ACCESS TO ALL DIGITAL SIGNAGE LOCATIONS.

AV Systems Diagram - Digital Signage

No Scale

CONSULTANTS

PROFESSIONAL SEALS

PROJECT TITLE

COLLEGE OF BUSINESS BUILDING

THE UNIVERSITY OF SOUTHERN MISSISSIPPI

ISSUE

MARK	DATE	DESCRIPTION
	01/12/14	CONSTRUCTION DOCUMENTS

MANAGEMENT

PROJECT NO: 0606
PROJECT AREA:
CAD DWG FILE:
DRAWN BY: DTW
CHECKED BY:

SHEET TITLE

AV SYSTEMS DIAGRAMS

AV4-17

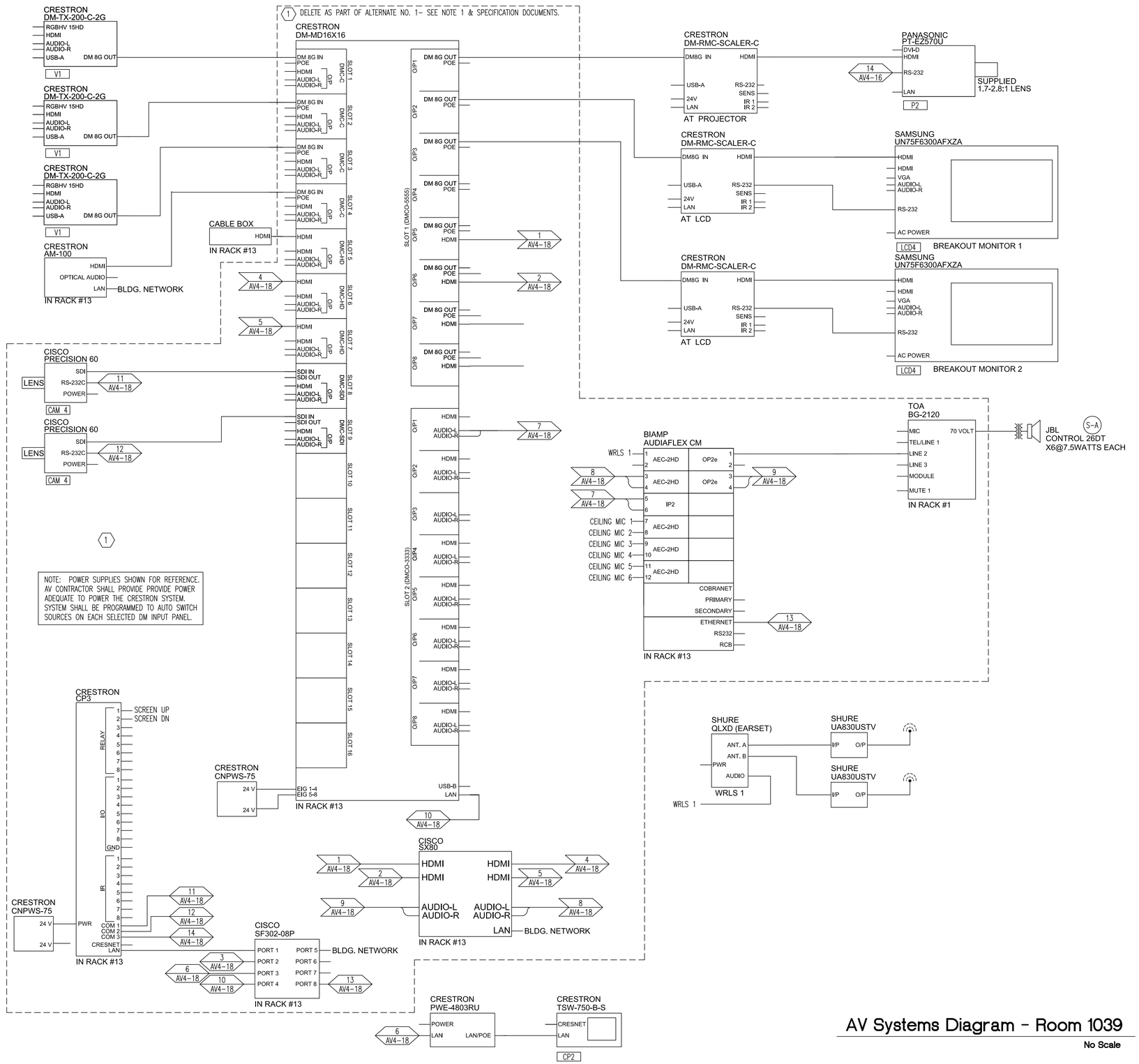

AV Systems Diagram - Room 1039

No Scale

SHEET KEYNOTES

1. ALTERNATE NO. 1- DISTANCE LEARNING DELETIONS.
   ADD: ONE (1) CRESTRON DMPS-300-C
   ONE (1) MIDDLE ATLANTIC DTRK-1018
   ONE (1) MIDDLE ATLANTIC DT-PVFD-10
   FROM BASE BID.

DELETE:ONE (1)CRESTRON DM-MD16X16
FOUR (4) CRESTRON DMC-C
THREE (3) CRESTRON DMC-HD
TWO (2) CRESTRON DMC-SDI
ONE (1) CRESTRON DMCO-5555
ONE (1) CRESTRON DMCO-3333
ONE (1) CRESTRON CP-3
TWO (2) CRESTRON CNPWS-75
ONE (1) CRESTRON CNXRMAK
ONE (1) CISCO SX80
ONE (1) CISCO SF302-08P
TWO (2) CISCO PRECISION 60
ONE (1) BIAMP AUDIAFLEX CM
FIVE (5) BIAMP AEC-2HD
ONE (1) BIAMP IP2
TWO (2) BIAMP OP2E
ONE (1) TOA BG2120 W/RACK MOUNT
ONE (1) MIDDLE ATLANTIC ERK-2725

RACK #13-DELETE AS PART OF ALTERNATE NO. 1
MIDDLE ATLANTIC
ERK-2725

1SP BLANK
BIAMP DSP
3SP BLANK
WRLS NO. 1
1SP BLANK
AM-100
CP3
DM-MD16X16
1SP BLANK
CABLE BOX (OWNER SUPPLIED)
1SP BLANK
SX80
1SP BLANK
SF302-08P
AMP

ROOM 1039 ALTERNATE NO. 1 RACK

CONSULTANTS

PROFESSIONAL SEALS

PROJECT TITLE

COLLEGE OF BUSINESS BUILDING

THE UNIVERSITY OF SOUTHERN MISSISSIPPI

ISSUE

MARK	DATE	DESCRIPTION
	01/12/14	CONSTRUCTION DOCUMENTS

MANAGEMENT
PROJECT NO: 0606
PROJECT AREA:
CAD DWG FILE:
DRAWN BY: DTW
CHECKED BY:
SHEET TITLE

AV SYSTEMS DIAGRAMS

AV4-18

RACK #1
MIDDLE ATLANTIC
ERK-2725

1SP BLANK
BIAMP DSP
BIAMP DSP
1SP BLANK
WRLS NO. 1
1SP BLANK
AM-100
CP3
DM-MD16X16
1SP BLANK
V-TUNE PRO HD
1SP BLANK
SX80
1SP BLANK
SF302-08P
AMP

DELETE AS PART OF ALTERNATE NO. 1

ROOMS 1008, 1014, 1015, 1040, 1043, 1048, 2004, 2005 & 2009

RACK #2
MIDDLE ATLANTIC
ERK-4425

USC-6R
BIAMP DSP
BIAMP DSP
1SP BLANK
WRLS NO. 1 | WRLS NO. 2
WRLS NO. 3 | WRLS NO. 4
US844SWB
1SP BLANK
AM-100
2SP BLANK
QUADVIEW HDX
DM-MD32X32
CNXRMAK
V-TUNE PRO HD
SX80
AMP NO. 1
1SP BLANK
AMP NO. 2
1SP BLANK
AMP NO. 3
1SP BLANK
AMP NO. 4

ROOM 1003

RACK #3
MIDDLE ATLANTIC
ERK-4425

MAMBA FIBER 16X16
SF500-24P
DFR-8321-C
1SP BLANK
CP3
DM-MD32X32
1SP BLANK
CNXRMAK
1SP BLANK
MAV3232A
TRICASTER 860

RACK #4
MIDDLE ATLANTIC
ERK-4425

1SP BLANK
BIAMP DSP
BIAMP DSP
BIAMP DSP
WRLS NO. 1 | WRLS NO. 2
US844SWB
1SP BLANK
AM-100
MAMBA FIBER 16X16
SF302-08P
DM-MD32X32
1SP BLANK
CNXRMAK
V-TUNE PRO HD
1SP BLANK
SX80
1SP BLANK
AMP

ROOM 1046

ROOMS 2042, 2051 & 2056-
DELETE AS PART OF ALTERNATES
NO. 6, 8 & 9.
ROOM 2053 DOES NOT HAVE A
TUNER.

AV Systems Diagram - Equipment Rack Layouts

3"=1'-0"

CONSULTANTS

PROFESSIONAL SEALS

PROJECT TITLE

COLLEGE OF
BUSINESS BUILDING

THE UNIVERSITY OF
SOUTHERN MISSISSIPPI

ISSUE

MARK	DATE	DESCRIPTION
	01/12/14	CONSTRUCTION DOCUMENTS

MANAGEMENT

PROJECT NO: 0606
PROJECT AREA:
CAD DWG FILE:
DRAWN BY: DTW
CHECKED BY:

SHEET TITLE

AV SYSTEMS
DIAGRAMS

AV6-1

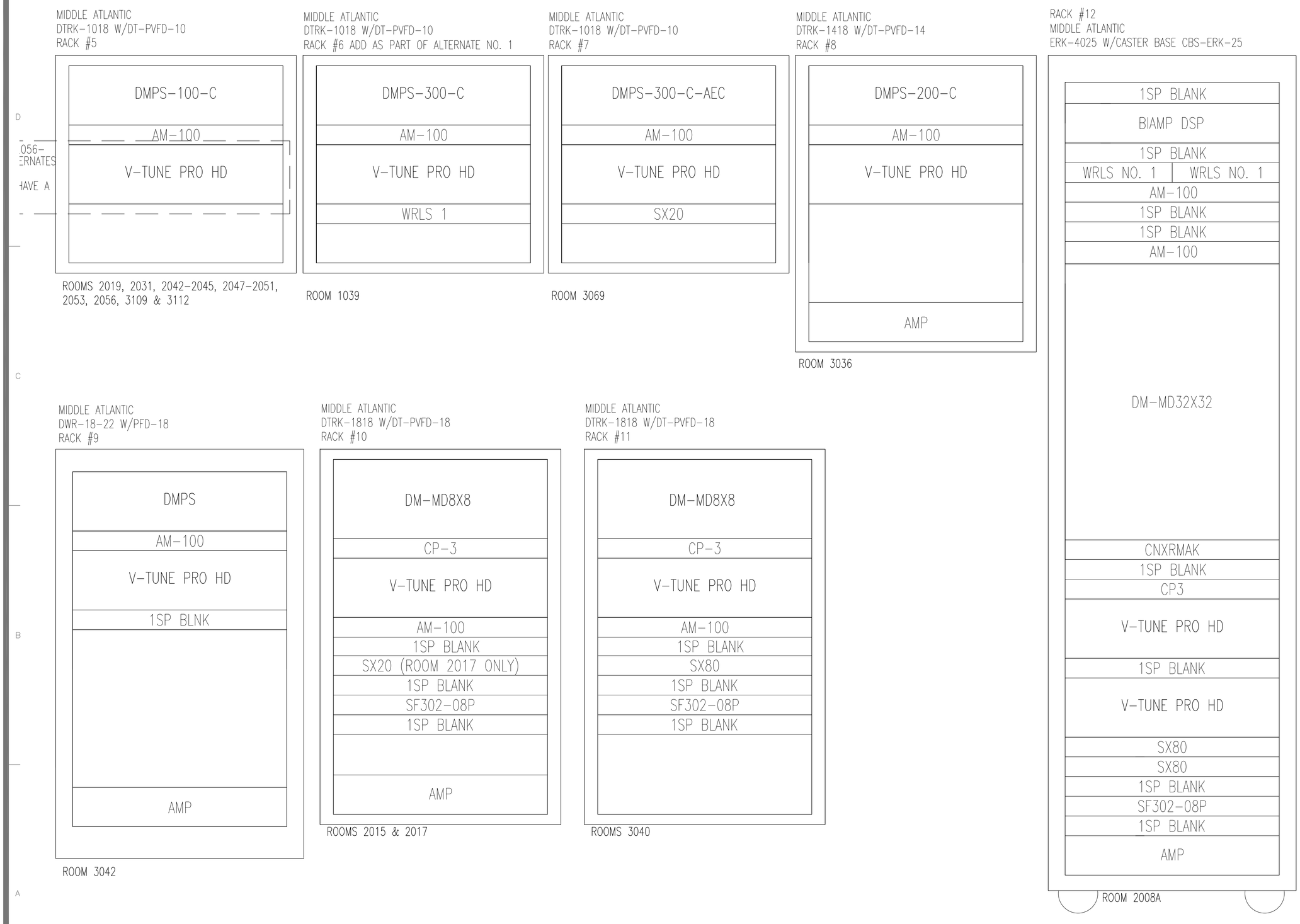

AV Systems Diagram - Equipment Rack Layouts

3"=1'-0"

CONSULTANTS

PROFESSIONAL SEALS

PROJECT TITLE

COLLEGE OF BUSINESS BUILDING

THE UNIVERSITY OF SOUTHERN MISSISSIPPI

ISSUE

MARK	DATE	DESCRIPTION
	01/12/14	CONSTRUCTION DOCUMENTS

MANAGEMENT

PROJECT NO: 0606

PROJECT AREA:

CAD DWG FILE:

DRAWN BY: DTW

CHECKED BY:

SHEET TITLE

AV SYSTEMS DIAGRAMS

AV6-2

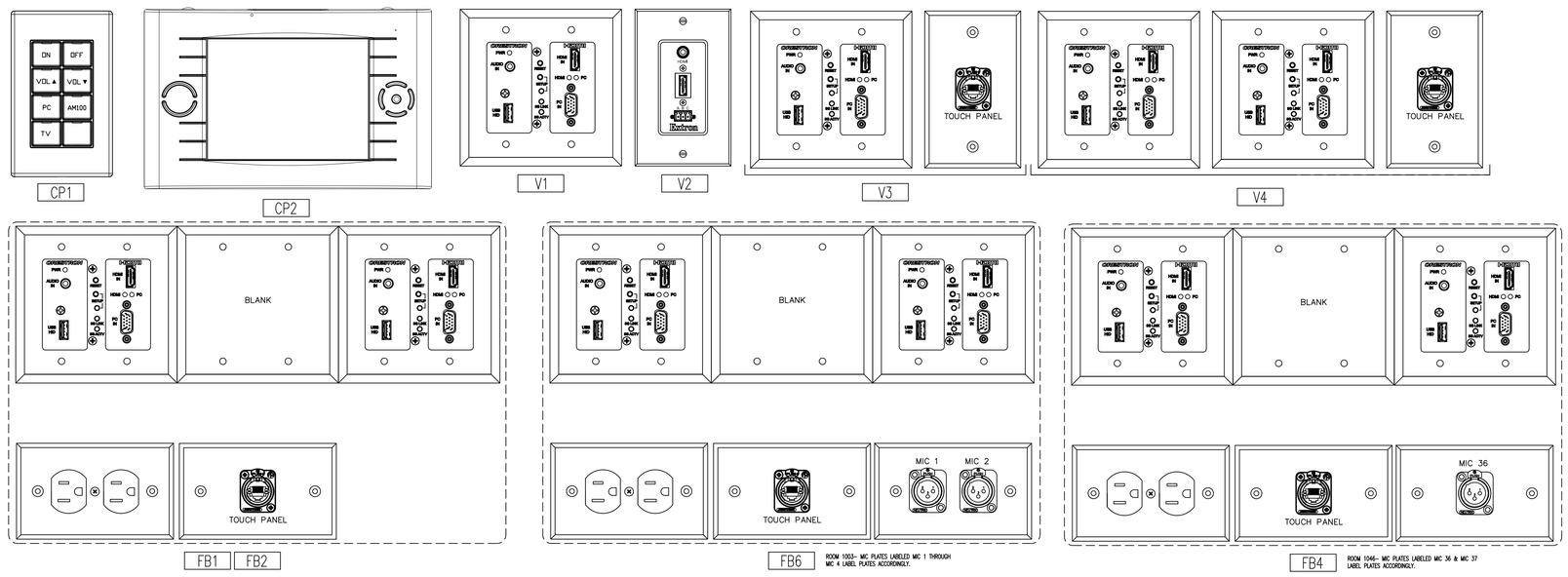

AV Systems Diagram - Panel Diagrams

6"=1'-0"

CONSULTANTS

PROFESSIONAL SEALS

PROJECT TITLE

COLLEGE OF BUSINESS BUILDING

THE UNIVERSITY OF SOUTHERN MISSISSIPPI

ISSUE

MARK	DATE	DESCRIPTION
	01/12/14	CONSTRUCTION DOCUMENTS

MANAGEMENT

PROJECT NO: 0606

PROJECT AREA:

CAD DWG FILE:

DRAWN BY: DTW

CHECKED BY:

SHEET TITLE

AV SYSTEMS DIAGRAMS

AV7-1

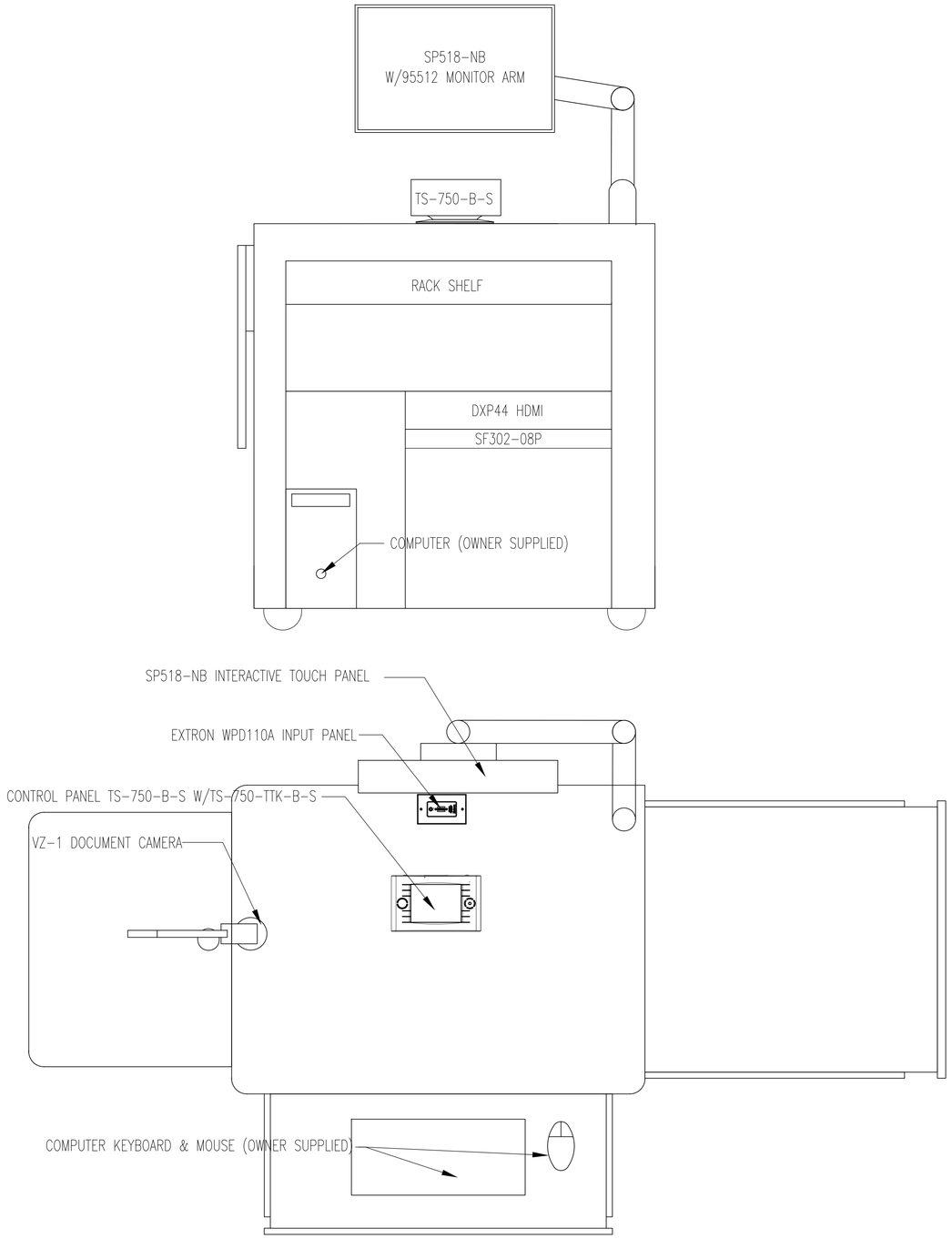

Podium Details-Spectrum Furniture 55254HDSMOD- Typ. of One (1)

2"=1'-0"

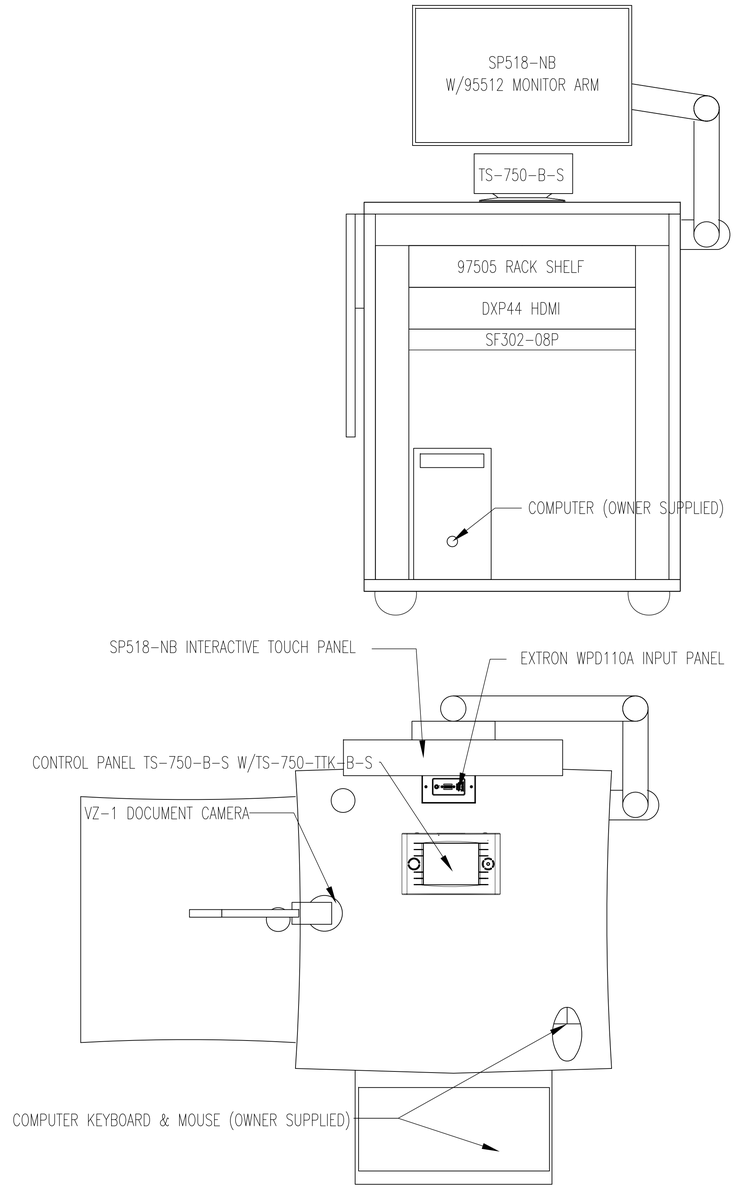

Podium Details-Spectrum Furniture 55211BWMOD- Typ. of sixteen (16)

2"=1'-0"

CONSULTANTS

PROFESSIONAL SEALS

PROJECT TITLE

COLLEGE OF BUSINESS BUILDING

THE UNIVERSITY OF SOUTHERN MISSISSIPPI

ISSUE

MARK	DATE	DESCRIPTION
	01/12/14	CONSTRUCTION DOCUMENTS

MANAGEMENT

PROJECT NO: 0606

PROJECT AREA:

CAD DWG FILE:

DRAWN BY: DTW

CHECKED BY:

SHEET TITLE

AV SYSTEMS DIAGRAMS

AV7-2